SANKAR POLYTECHNIC COLLEGE (AUTONOMOUS)

SANKAR NAGAR

N-SCHEME (Full Time)

SYLLABUS

FIRST YEAR

2019 – 2020 onwards

CONTENTS

COURSE CODE	COURSE NAME
	REGULATIONS
	QUESTION PATTERN
	CURRICULAM OUTLINE AND SCHEME OF VALUATION
	1. MECHANICAL ENGINEERING
N101	COMMUNICATION ENGLISH I
N102	ENGINEERING MATHEMATICS I
N103	ENGINEERING PHYSICS I
N104	ENGINEERING CHEMISTRY I
N5105	ENGINEERING GRAPHICS I
N106	APPLIED SCIENCE PRACTICAL I
N107A	WORKSHOP PRACTICE
N201	COMMUNICATION ENGLISH II
N202	ENGINEERING MATHEMATICS II
N203	ENGINEERING PHYSICS II
N204	ENGINEERING CHEMISTRY II
N5205	ENGINEERING GRAPHICS II
N206	APPLIED SCIENCE PRACTICAL II
N5207	COMPUTER APPLICATION PRACTICAL

SANKAR POLYTECHNIC COLLEGE (AUTONOMOUS)

SANKAR NAGAR

N-SCHEME (Full Time)

R E G U L A T I O N S

(2019 onwards)

DIPLOMA COURSES IN ENGINEERING/TECHNOLOGY

(SEMESTER SYSTEM)
(Implemented from 2019- 2020)

N – SCHEME
R E G U L A T I O N S

1. Description of the Course: (As per DOTE Norms.): Full Time (3 years)
The Course for the full Time Diploma in Engineering shall extend over a period of three academic years, consisting of 6 semesters.

2. Condition for Admission:
At the time of admission the candidate will have to satisfy certain minimum requirements, which may be prescribed from time to time by the DOTE and the Government of Tamil Nadu

3. Admission to Second year (Lateral Entry): As per DOTE Norms.

4. Age Limit: No Age limit.

5. Medium of Instruction: English

6. Eligibility for the Award of Diploma:
No candidate shall be eligible for the Diploma unless he/she has undergone the prescribed course of study for a period of not less than 3 academic years when joined in First Year and two years if joined under Lateral Entry scheme in the second year and passed the prescribed examination.

The minimum and maximum period for completion of Diploma Courses are as given below:

Diploma Course	Minimum Period	Maximum Period
Full Time	3 Years	6 Years

7. Subjects of Study and Curriculum outline:
The subjects of study shall be in accordance with the syllabus prescribed from time to time, both in theory and practical. The curriculum outline is given along with the syllabus book.

8. Requirements of Examination
The Examinations shall be conducted at the end of each semester. A student will be permitted to appear for the End Examination for a subject only if,

- He/she secures 80% of attendance in the subject concerned
- His/Her conduct has been satisfactory

If the percentage attendance is below 70%, no candidate will be allowed to appear for the End Semester Examinations, in any case. If the percentage of attendance is between 70% and 80%, the candidate may be allowed to appear for the End semester Examinations under Medical grounds.

The Internal assessment marks for all the subjects will be awarded on the basis of continuous internal assessment earned during the semester concerned. For each subject 25 marks are allotted for internal assessment and 75 marks are allotted for End Examination.

Internal Assessment:

A . For Theory Subjects:

The Internal Assessment marks are awarded for a total of 25 marks, which are to be distributed as follows:

(i) Test: 10 Marks

Test	Units	When to Conduct	Max. Marks	Duration
Test I	Units I and II	End of 5th Week	50	2 Hrs
Test II	Mid Semester Examination – Units (I to III)	End of 10th Week	100	3 Hrs
Test III	Units IV and V	End of 14th Week	50	2 Hrs
Test IV	Model Examination (All units)	Before End Examination	100	3 Hrs

For each subject Four tests are given and 5 marks will be awarded for the average of Mid – Semester Exam and Model Exam and 5 marks will be awarded for the average of the unit tests.

(ii) Assignment: 10 Marks

For each subject Three Assignments are to be given each for 10 marks and the average marks scored should be reduced for 10 marks.

(iii) Tutorial: 5 Marks

For each subject one tutorial to be given in the form of any one of the following – Open book test/ Objective test/Seminar using LCD projector /Online test.

B. For Practical Subjects:

The internal assessment marks are awarded for a total of 25 marks which are to be distributed as follows:-

a) Procedure/ observation and tabulation/ other Practical related Work/ Viva voce	**- 15 Marks**
b) Record writing	**- 10 Marks**
Total	**- 25 Marks**

- All the Experiments/exercises indicated in the syllabus should be completed and the same to be given for final End examinations.
- The students have to submit the duly signed bona fide record note book/file during the Practical End Examinations.
- All the marks awarded for assignment and Test should be entered in the Personal Log Book of the staff, who is handling the subject. This is applicable to both Theory and Practical subjects.

Criteria for Pass:

1. No candidate shall be eligible for the award of Diploma unless he/she has undergone the prescribed course of study successfully and pass all the subjects prescribed in the curriculum.

2. A candidate shall be declared to have passed the examination in a subject if he/she secures not less than 40% in theory subjects and 50% in practical subject out of the total prescribed maximum marks including both the internal assessment and the End Examination marks put together, subject to the condition that he/she secures at least a minimum of 30 marks out of 75 marks in the End Theory examinations and a minimum of 35 marks out of 75 marks in the End Practical Examinations.

Duration of a period in the Class Time Table:

The duration of each period of instruction is 1 hour and the total period of instruction hours excluding interval and Lunch break in a day should be uniformly maintained as 7 hours corresponding to 7 periods of instruction (Theory & Practical).

Seminar:

The total seminar hours should be distributed equally to total theory subjects per semester. A topic from subject or current scenario is given to students. The students will be allowed to collect materials from the library and prepare the seminar paper. During the seminar hour, students have to present the paper and submit seminar material to the respective staff member, who is handling the subject.

Question Pattern 1

The question pattern is given below for **all common subjects** as follows: For other department subjects the question pattern is attached with the syllabus itself.

Part	Marks allotment	Total
Part A	20 Questions to be answered out of 25 questions with five questions from each unit. Each question carries 2 marks.	20 x 2 = 40 marks
Part B	Each question will contain 3 Sub questions, out of them 2 Sub questions is to be answered and one question from each unit. Each question carries 6 marks.	5 x 2 x 6 = 60 marks

Question Pattern 2

The question pattern is given below for **all department subjects** as follows: For other department subjects the question pattern is attached with the syllabus itself.

Part	Marks allotment	Total
Part A	5 out of 10 Questions in **either – or** pattern with two questions from each unit. Each question carries 10 marks.	5 x 10 = 50
Part B	9 out of 14 questions with two questions minimum and three questions maximum from each unit. Each question carries 5 marks.	9 x 5 = 45 marks
Part C	One compulsory question from any unit. Each question carries 5 marks.	1 X 5 = 5 marks

CURRICULUM OUTLINE
Diploma in Mechanical Engineering (Full Time)
N– Scheme

I SEMESTER

Subject Code	SUBJECT	HOURS PER WEEK		
		Theory Hours	Practical Hours	Total Hours
N101	Communication English I	5	--	5
N102	Engineering Mathematics I	7	--	7
N103	Engineering Physics I	5	--	5
N104	Engineering Chemistry I	5	--	5
N5105	Engineering Graphics - I	5	--	5
N106	Applied Science Practical I	--	4	4
N107A	Workshop Practice	--	4	4
	Total Hours	**27**	**8**	**35**

II SEMESTER

Subject code	SUBJECT	HOURS PER WEEK		
		Theory Hours	Practical Hours	Total Hours
N201	Communication English II	5	--	5
N202	Engineering Mathematics II	7	--	7
N203	Engineering Physics II	5	--	5
N204	Engineering Chemistry II	5	--	5
N5205	Engineering Graphics - II	5	--	5
N206	Applied Science Practical II	--	4	4
N5207	Computer Application Practical	--	4	4
	Total Hours	**27**	**8**	**35**

SCHEME OF EXAMINATION – I SEMESTER

Subject Code	Subject	EXAMINATION MARKS			Minimum for Pass	Duration of Exam Hours
		Internal Assessment Marks	End Exam Marks	Total Marks		
N101	Communication English I	25	75	100	40	3
N102	Engineering Mathematics I	25	75	100	40	3
N103	Engineering Physics I	25	75	100	40	3
N104	Engineering Chemistry I	25	75	100	40	3
N5105	Engineering Graphics - I	25	75	100	40	3
N106	Applied Science Practical I	25	75	100	50	3
N107A	Workshop Practice	25	75	100	50	3
	Total	175	525	700		

SCHEME OF EXAMINATION – II SEMESTER

Subject Code	Subject	EXAMINATION MARKS			Minimum for Pass	Duration of Exam Hours
		Internal Assessment Marks	End Exam Marks	Total Marks		
N201	Communication English II	25	75	100	40	3
N202	Engineering Mathematics II	25	75	100	40	3
N203	Engineering Physics II	25	75	100	40	3
N204	Engineering Chemistry II	25	75	100	40	3
N5205	Engineering Graphics - II	25	75	100	40	3
N206	Applied Science Practical II	25	75	100	50	3
N5207	Computer Application Practical	25	75	100	50	3
	Total	175	525	700		

N - SCHEME

(Implemented from the Academic year 2019- 2020 onwards)

Course Name : **All branches of Diploma in Engineering**
Subject code : **N101**
Semester : **I**
Subject Title :**COMMUNICATION ENGLISH I**

TEACHING AND SCHEME OF EXAMINATION

Number of weeks per semester:14 weeks

Subject	Instructions		Examination			
	Hours/ Week	Hours/ Semester	Marks			Duration
			Internal Assessment	Board Examination	Total	
COMMUNICATION ENGLISH - I	5 Hrs.	70 Hrs.	25	100 *	100	3 Hrs

*Examination will be conducted for 100 Marks and it will be reduced to 75 Marks.

Topics and Allocation of Hours:

UNIT	TOPIC	TIME
1	Functional Grammar and Usage	14
2	Vocabulary Enrichment	15
3	Situational English	16
4	Creative English	16
5	English for scholarly presentation/ fluency	9
	Total	**70Hrs**

RATIONALE:

- With the advent and supremacy of the Internet, Smart phones, e- commerce and Social Media in global communication, English has metamorphosed itself with new dimensions to get the communicator's thoughts, feelings and interactions dressed in alien colours.
- To execute the tasks in Technical Environment, whether academic, professional or social, proficiency in English plays a vital role and a requisite for communication skills has gained momentum both for e-communication, higher studies abroad and placement in MNCs
- Amazing and inconceivable developments in technology has led various industries to coin and employ their own new words everyday and hence revision of syllabus,

especially to cater to the need for essential updated vocabulary has become inevitable.

- In addition to the retention of certain functional grammar parts to attest accuracy in communication, new components such as vocabulary enrichment, situational English, Creative English and English for scholarly Presentation have been introduced to equip the learners to cope up with revamping Technical Scenario.

OBJECTIVES:

At the completion of the study of I and II semesters, the students will be able to

- Apply functional grammar to produce pristine presentations in English.
- Carry out effective interaction with the aid of formation of interrogatives.
- Enrich his/ her vocabulary to cater to the needs of changing linguistic requirements.
- Understand and respond to the e-content available elsewhere in academic, professional and social environments.
- Understand and review e- books, movies and TV programmes and post his / her reviews online.
- Execute dialogues with his friends, teachers and colleagues in day-to-day situations.
- Describe and interpret visuals, images, and machine drawings, events in books and on the Net.
- Understand, acquire and employ new structures in scholarly presentations with an exposure to works of Great personalities.
- Communicate effectively with idioms and phrases appropriate to real- life situations.

N101 - COMMUNICATION ENGLISH I
DETAILED SYLLABUS

Contents: **Theory**

UNIT	NAME OF THE TOPICS	HOURS
1	**Functional Grammar and Usage** 1. **Kinds of sentences** 2. Parts of speech 3. Functional units 4. Use of Main verb & Auxiliary verb 5. Application of Tense forms (Simple Present, Present Continuous, Present Perfect, Simple Past, Past Continuous, Past Perfect, Simple Future, Future Continuous only) 6. Framing Yes/ No Questions 7. **Recognizing and distinguishing Active Voice & Passive Voice.** 8. Use of Prepositions	**14**
2	**Vocabulary Enrichment** 1. Word conversion – Noun to Verb, Verb to Noun. 2. **Arrangement of jumbled words into meaningful sentences**. 3. Homophones 4. **Compound words** 5. **Prefix and Suffix** 6. **Matching words**	**15**
3	**Situational English** 1. Dialogue for day to day situations 2. Short messages for e- communication 3. Letter writing – **Official Communication** (Leave Application, Requisition for Bonafide, Applying for a job) 4. Story writing - developing the story with the outlines provided 5. Comprehension 6. Resume' writing.	**16**

4	**Creative English** 1. Review writing (Book/ Movie/ Journal) 2. Visual description 3. Advertisement Comprehension 4. Transforming word cloud into **sentences** 5. Transforming verbal passage into graphics (Pie Chart) 6. Giving Directions.	**16**
5	**English for Scholarly Presentation / Fluency** 1. "The Tiger in the Tunnel "by Ruskin Bond 2. "Daffodils" by William Wordsworth 3. "Death the Leveler" by James Shirley.	**9**

Board Examination - Question Paper Pattern

N101 - COMMUNICATION ENGLISH I

Time: 3 Hrs. **Max. Marks: 100**

PART- A GRAMMAR (40 marks)

I. 1) Answer any twelve questions. **(12X3=36)**

1	a	
	b	
	c	
2	a	
	b	
	c	
3	a	
	b	
	c	
4	a	
	b	
	c	
5	a	
	b	
	c	
6	a	
	b	
	c	
7	a	
	b	
	c	
8	a	
	b	
	c	
9	a	
	b	
	c	
10	a	
	b	
	c	
11	a	
	b	
	c	
12	a	
	b	
	c	
13	a	
	b	
	c	

2) Write any four sentences in 4 different tense forms for the sentence given.

(4 marks)

PART- B (5 X 4 = 20 Marks)

II. Answer any five of the following:

II	**a**	
	b	
	c	
	d	
	e	
	f	

PART- C (5 X 4 = 20 Marks)

III. Answer any five of the following:

III	**a**	
	b	
	c	
	d	
	e	
	f	

PART- D (5 X 2 = 10 Marks)

IV. Answer the following questions in one or two sentences:

A	**a**	
	b	
	c	
	d	
	e	

Write the following in about 50 words: (2 X 5 =10 Marks)

B	**a**	
	b	

N- SCHEME

(Implements from the Academic year 2019-2020 onwards)

Course Name : **All branches of Diploma in Engineering**
Subject Code : **N102**
Semester : **I**
Subject Title : **ENGINEERING MATHEMATICS I**

TEACHING AND SCHEME OF EXAMINATION

Number of weeks per semester: 14weeks

Subject	Instructions		Examination			
	Hours / Week	Hours / Semester	Marks			Duration
ENGINEERING MATHEMATICS I	7 Hrs.	98 Hrs.	Internal Assessment	Board Examination	Total	
			25	100*	100	3 Hrs.

* Examination will be conducted for 100 Marks and it will be reduced to 75 Marks.

Topics and Allocation of Hours:

UNIT	Topic	Time
1	Algebra and Basics of Complex Number	20 Hrs.
2	Complex Number and Trigonometry	19 Hrs.
3	Differential Calculus	20 Hrs.
4	Partial Differentiation & Integration	20 Hrs.
5	Vector Algebra	19 Hrs.
	Total	98 Hrs.

N102 - ENGINEERING MATHEMATICS I
DETAILED SYLLABUS

Contents: **Theory**

UNIT	NAME OF TOPIC	Time
I	**ALGEBRA &COMPLEX NUMBER** **1.1DETERMINANTS:** Definition and expansion of determinants of order 2 and order 3. Properties of determinants. Cramer's rule to solve simultaneous equations (in 2 and 3 unknowns) – Simple problems. **1.2 MATRICES** : Adjoint of a matrix and inverse of a matrix – Rank of a matrix by determinant form.(matrix of order 3 x 4) – Definitions of Factorial notation –definition of Permutation and Combination (not for examination). Binomial Theorem for rational index upto -2 (statement only)- Expansion only for -1, and -2. **1.3 ALGEBRA OF COMPLEX NUMBERS:** Definition - Real and Imaginary parts, conjugates, Modulus and amplitude form, Polar form(definition only),multiplication and division of complex numbers(geometrical proof not needed) – Simple problems. **Argand Plane-simple problems. Argand plane – Collinear points, four points forming square, rectangle, rhombus.**	6 Hrs. 7 Hrs. 7 Hrs.
II	**COMPLEX NUMBER & TRIGONOMETRY** **2.1 DE MOIVRE'S THEOREM:** DeMoivre's Theorem (statement only) - Related problems. **2.2 ROOTS OF A COMPLEX NUMBER:** Find the nth roots of unity solving equation of the form $X^n \pm 1=0$ where $n \leq 7$.. Simple Problems. **2.3 COMPOUND ANGLES:** Expansion of sin(A±B), cos(A±B) and tan(A±B) (without proof) –Multiple angle of 2A and 3A (Formula only)-Sum and Product formulae - Simple Problems.	6 Hrs. 6 Hrs. 7 Hrs.

III	**DIFFERENTIAL CALCULUS** **3.1 LIMITS:** Definition of limits. Problems using the following results i $\underset{x\to a}{\text{Lt}}\left(\frac{x^n-a^n}{x-a}\right)$, ii $\lim_{\theta\to 0}\left(\frac{\sin\theta}{\theta}\right)=1$ ii $\lim_{\theta\to 0}\left(\frac{\tan\theta}{\theta}\right)=1$ (θ in radians) (results only) – Simple problems **3.2 DIFFERENTIATION:** Definition – Differentiation of X^n, sinx ,cosx, tanx, cotx, secx, cosecx, logx, e^x,u±v, uv, uvw, u/v (results only). Simple problems. **3.3 DIFFERENTIATION METHODS:** Differentiation of function of function(Chain Rule) - Successive Differentiation up to second order(Parametric form not included). Simple Problems.	6 Hrs. 7 Hrs. 7 Hrs.
IV	**PARTIAL DIFFERENTIATION & INTEGRATION** **4.1 PRTIAL DIFFERENTIATION:** Definition –Partial differentiation of two variables up to second order only. Simple Problems. **4.2 INTEGRATION:** Introduction – Definition of integration- Integral values using reverse process of differentiation – Integration using	7 Hrs. 6 Hrs.

	decomposition method. Simple Problems. **4.3 INTEGRATION BY SUBSTITUTION:** Integrals of the form $\int [f(x)]^n f^1(X)$ dx where $(n \neq -1)$, $\int \frac{f1(X)}{f(X)} dx$, $\int [f(x)] f^1(X)$ dx. Simple Problems.	7 Hrs.
V	**VECTOR ALGEBRA** **5.1 VECTOR INTRODUCTION:** Definition of Vector –types, addition and subtraction of vectors, Properties of addition and subtraction - Position vector. Resolution of vector in two and three dimensions. Direction cosines, Direction ratios. Simple problems. **5.2 SCALAR PRODUCT OF VECTORS:** Definition of Scalar product of two vectors, Geometrical meaning - properties – angle between two vectors. Simple Problems. **5.3 VECTOR PRODUCT OF VECTORS:** Definition of vector product of two vectors –Geometrical meaning –properties angle between two vectors – Unit vectors perpendicular to two vectors - Simple Problems.	6 Hrs. 7 Hrs. 6 Hrs.

UNIT	ENGINEERING MATHEMATICS	hrs
I	**Algebra and Complex Number:** 1. Determinants. 2. Matrices, Binomial Theorem. 3. Complex Number.	20
II	**Complex Number and Trigonometry:** 1. DeMoivre's Theorem. 2. Roots of a complex number. 3. Compound Angles.	19
III	**Differential Calculus:** 1. Limits. 2. Differentiation. 3. Differentiation Methods.	20
IV	**Partial Differentiation and Integration:** 1. Partial Differentiation. 2. Integration. 3. Integration by substitution.	20
V	**Vector Algebra :** 1. Vector Introduction. 2. Scalar Product of Two Vectors. 3. Vector Product of Two Vectors.	19

Text Book:

1. Mathematics for Higher Secondary – I year and II year (Tamil Nadu Text Book Corporation)

Reference Book:

1. Engineering Mathematics - Dr. M.K.Venkat raman, National Publishing Co, Chennai
2. Engineering Mathematics – Dr. P.Kanda samy & Others, S.Chand & Co Ltd, New Delhi

END EXAMINATION - QUESTION PAPER PATTERN

N102 - ENGINEERING MATHEMATICS I

Time : **3 Hrs.** Max.Marks :**100**

PART A - **20 Questions to be answered out of 25 for 2 marks each.**

PART B - **All the 5 Questions to be answered**

Each question in PART B will contain 3 Sub questions, out of them 2 Sub questions is to be answered for 6 marks each.

Part A	**20 X 2**	**40 Marks**
Part B Descriptive answer type questions Each question in PART B will contain 3 Sub questions, out of them 2 Sub questions is to be answered for 6 marks each.	**5 X 2 X 6**	**60 Marks**
Total		**100 Marks**

Out of the 3 Sub questions in PART B, one sub question must be on problem based to test the analytical ability/logical ability /diagnostic ability/conceptual ability relevant to that subject content. Equal importance is to be given to whole syllabus.

N-SCHEME
(Implements from the academic year 2019 – 2020 onwards)

Course Name : **All branches of Diploma in Engineering**
Subject Code : **N103**
Semester : **I**
Subject Title : **ENGINEERING PHYSICS I**

TEACHING AND SCHEME OF EXAMINATION

Number of weeks per semester : 14 weeks

Subject	Instructions		Examination			
ENGINEERING PHYSICS I	Hours/ Week	Hours / Semester	Marks			Duration
	5 Hrs.	70 Hrs.	Internal Assessment	Board Examination	Total	
			25	100 *	100	3 Hrs.

*Examination will be conducted for 100 Marks and it will be reduced to 75 Marks.

Topics and Allocation of Hours :

Unit	Topic	Time
1	**S I UNITS AND STATICS**	12 Hrs.
2	**PROPERTIES OF MATTER**	12 Hrs.
3	**DYNAMICS – I**	12 Hrs.
4	**DYNAMICS – II**	12 Hrs.
5	**SOUND AND MAGNETISM**	12 Hrs.
REVISION + TEST + MODEL EXAM		10 Hrs.
TOTAL		**70 Hrs.**

RATIONALE :

The Exponential growth of Engineering and Technology has benefited the mankind with extreme sophistication and comport. To sustain this development, continuous research and development should take place not only in Engineering and Technology but also in Basic Science such as Physics.

The Various divisions of Physics like Statics, Dynamics, Elasticity, Rotational Motion, Sound, Magnetism etc provide the foundation by enlightening the Fundamental facts, Principles, Laws and Correct sequence of events to develop the engineering and Technology field for the prosperity of human beings.

OBJECTIVES :

At the end of the study of I Semester the student will be able to

- Understand the importance of SI units and dimensional formulae.
- Acquire broad ideas about resultant, moment of force and torque of a couple.

- Understand the elastic property and the types of Modulus of elasticity.
- Explain the surface tension of liquids and viscosity of fluids.
- Understand Newton's laws of motion and equations of different types of motion.
- Acquire knowledge about projectile motion, circular motion and its application.
- Gain knowledge about rotational kinetic energy and angular momentum.
- Acquire broader ides about variation of acceleration with respect to height and its importance in launching polar and geostationary satellites.
- Understand the propagation of sound and acoustics of building.
- Explain the importance of hysteresis of magnetic materials and its uses.
- Solve simple problems involving expressions derived in all the above topics.

N103 - ENGINEERING PHYSICS I
DETAILED SYLLABUS

Contents : **Theory**

Unit	Name of the Topic	Hours
I	**S I UNITS AND STATICS** **1.1 UNITS AND MEASUREMENT** Unit-Definition- Fundamental Quantities - Definition-Seven fundamental quantities; their SI units and symbol for the units- Supplementary quantities-plane angle and solid angle- their SI units and symbol for the units. Derived physical quantities Dimensional formula for length, mass and time - derivation of dimensional formula for area, volume, density, velocity, momentum, acceleration, force, impulse, work or energy and power. Uses of dimensional formula Conventions followed in SI-units Multiples & sub-multiples and prefixes of units.	**4 Hrs**
	1.2 STATICS Scalar and vector quantities – Definitions and examples – Concurrent forces and coplanar forces – Definition - Resolution of a vector into two perpendicular components- Resultant and equilibrant – Definitions - Parallelogram law of forces- statement- Expressions for magnitude and direction of the resultant of two forces acting at a point with an acute angle between them - Lami's theorem- Statement and explanation- Experimental verification of parallelogram law of forces and Lami's theorem. Simple problems based on expressions for magnitude and direction of resultant. Moment of a force- Clockwise and anti-clockwise moments - Principle of moments- Couple – Torque acting due to a couple – Experimental determination of mass of the given body using principle of moments.	**8 Hrs**
II	**PROPERTIES OF MATTER** **2.1 ELASTICITY** Elastic and plastic bodies – Definition - stress, strain - Definitions – Hooke's law –statement - three types of strain– Elastic and plastic limit – Yield point – Study of Stress – Strain relationship – Young's modulus, Bulk modulus, Rigidity modulus – Definitions - Uniform and non uniform bending of beams- Experimental determination of the Young's modulus of the material of a beam by uniform bending method. Simple problems based on stress, strain and Young's modulus.	**4 Hrs**
	2.2 VISCOSITY Viscosity – Definition - Coefficient of viscosity - Definition, SI unit and dimensional formula - Stream line flow, turbulent flow-Explanation - Critical velocity –Definition- Similarities between current flow and liquid flow - Experimental comparison of coefficient of viscosity of two low viscous liquids – Terminal velocity – Definition - Experimental determination of coefficient of viscosity of a high viscous liquid by Stokes'	**4 Hrs**

	method – Practical applications of viscosity. **2.3 SURFACE TENSION** Surface tension & angle of contact- Definitions – Expression for surface tension of a liquid by capillary rise method - Experimental determination of surface tension of water by capillary rise method – Practical applications of capillarity. Simple problems based on expression for surface tension.	**4 Hrs**
III	**DYNAMICS – I** **3.1. STRAIGHTLINE MOTION** Introduction – Newton's laws of motion – fundamental equations of motion for objects – horizontal motion – falling freely – thrown vertically upwards **3.2. PROJECTILE MOTION** Projectile motion, angle of projection, trajectory, maximum height, time of flight, and horizontal range – Definitions - Expressions for maximum height, time of flight and horizontal range – Condition for getting the maximum range of the projectile – The path of the projectile – Parabola - Simple problems based on expressions for maximum height, time of flight and horizontal range. **3.3 CIRCULAR MOTION** Circular motion, angular velocity, period and frequency of revolutions– Definitions – Relation between linear velocity and angular velocity – Relation between angular velocity, period and frequency – Normal acceleration, centripetal force and centrifugal force – Definitions – Expressions for normal acceleration and centripetal force. Banking of curved path – angle of banking definition – Expression for the angle of banking of a curved path. {$\tan\theta = v^2 / (r\ g)$} Simple problems based on the expression for centripetal force and angle of banking.	**2 Hrs** **4 Hrs** **6 Hrs**
IV	**DYNAMICS – II** **4.1 ROTATIONAL MOTION OF RIGID BODIES** Rigid body – Definition - Moment of inertia of a rigid body about an axis – expressions – Radius of gyration – Definition – Expression for the kinetic energy of a rotating rigid body about an axis – Angular momentum – Definition – Expression for the angular momentum of a rotating rigid body about an axis – Law of conservation of angular momentum – Examples. **4.2 GRAVITATION** Newton's laws of gravitation – Acceleration due to gravity on the surface of earth – Expression for variation of acceleration due to gravity with altitude **4.3 SATELLITES** Satellites – Natural and artificial – Escape velocity and orbital velocity – Definitions –Expression for escape velocity – Polar and Geo stationary satellites-Uses of artificial satellites. Simple problems based on the expressions for escape velocity	**5 Hrs** **3 Hrs** **4 Hrs**

V	**SOUND AND MAGNETISM** **5.1 SOUND** Wave motion – Introduction and definition – Audible range – Infrasonic - Progressive waves, longitudinal and transverse waves – Examples – Amplitude, wave length, period and frequency of a wave – Definitions - Stationary or standing waves. Vibrations - Free & forced vibrations and resonance – definitions and examples – Sonometer – Experimental determination of frequency of a tuning fork. Acoustics of buildings – Echo - Reverberation, reverberation time, Sabine's formula for reverberation time (no derivation) – Coefficient of absorption of sound energy – Noise pollution –Simple problems based on expression for frequency of vibration and Sabine's formula. **5.2 MAGNETISM** Pole strength – Definitions – Magnetic moment, intensity of magnetization, magnetizing field intensity, magnetic induction, hysteresis loss, saturation, retentivity and coercivity – Definitions- Method of drawing hysteresis loop of a specimen using a solenoid – Uses of Hysteresis loop simple problem based on intensity of magnetization.	**7 Hrs** **5 Hrs**

Reference Book :

1) Physics – Resnick and Haliday – Wisley Toppan publishers – England
2) Engineering Physics – B.L.Theraja – S. Chand Publishers
3) A text book of sound – R.L. Saighal & H.R. Sarna – S. Chand & Co.
4) Mechanics – Narayana Kurup – S. Chand Publishers.

END EXAMINATION - QUESTION PAPER PATTERN

N103 - ENGINEERING PHYSICS I

(Relevant data should be provided in the Question paper for solving the problems)

Time: 3 Hrs. **Max.Marks: 100**

PART A - **20 Questions to be answered out of 25 for 2 marks each.**
PART B - **All the 5 Questions to be answered**
Each question in PART B will contain 3 Sub questions, out of them 2 Sub questions is to be answered for 6 marks each.
The complete syllabus is covered with equal weightage.

Part A	**20 X 2**	**40 Marks**
Part B Descriptive answer type questions Each question in PART B will contain 3 Sub questions, out of them 2 Sub questions is to be answered for 6 marks each.	**5 X 2 X 6**	**60 Marks**
Total		**100 Marks**

N-SCHEME
(Implements from the Academic year 2019-2020 onwards)

Course Name **: All branches of Diploma in Engineering**
Subject Code **:N104**
Semester **: I**
Subject Title **: ENGINEERING CHEMISTRY I**

TEACHING AND SCHEME OF EXAMINATION
No. of Weeks per Semester: 14 Weeks

SUBJECT	INSTRUCTIONS		EXAMINATION			
ENGINEERING CHEMISTRY I	HOURS / WEEK	HOURS / SEMESTER	MARKS			DURATION
			Internal assessment	Board examination	Total	
	5 Hrs	70 Hrs	25	100*	100	3 Hrs

* Examination will be conducted for 100 marks and it will be reduced to 75 marks.

Topics and Allocation of Hours:

Unit	Topic	Time
1	Atomic Structure, Acids and Bases, Solutions.	12 Hrs
2	Surface chemistry, Catalysis, Solid State	12 Hrs
3	Technology of water - I, Technology of water - II, Water management	12 Hrs
4	Electrochemistry, Energy Sources, Nanotechnology – Fullerenes and its types	12 Hrs
5	Corrosion, Methods of Prevention of Corrosion, Organic Coatings	12 Hrs
	Revision, Assessment Test And Model Exam	10 Hrs
	TOTAL	70 Hrs

RATIONALE:

The subject Engineering Chemistry creates foundation for understanding basic concepts of chemistry. It lay foundation of all the elements, structure and strength of acids and bases. It imparts knowledge about few engineering technologies. Prime importance is given to technology of water, its analysis of few parameters like pH, TDS, Hardness, dissolved chlorine, e-coli etc. It provides basic concepts about Electrochemistry, Energy Sources, Corrosion, Methods of Prevention of Corrosion. The latest trends on Nano

technology and its application in various fields of engineering and a basic concept of fullerenes is also dealt with.

OBJECTIVES:

The objective of this Course is to make the student:

1. Study about the importance of Engineering Chemistry in industry.
2. Know about atomic structure, Chemical bonding, Acids and Bases and Solutions.
3. Learn about Surface Chemistry, Colloidal particles, Catalyst and Solid state.
4. Know about water and its analysis, treatment and conservation.
5. Explain the details of electrochemistry, energy sources and nano technology.
6. Understand corrosion and its prevention methods.

N104 - ENGINEERING CHEMISTRY I
DETAILED SYLLABUS

Contents: **Theory**

Unit	Name of the Topic	Hours
1	**1.1 Atomic Structure and chemical bonding:** Fundamental particles – proton –electron- neutron - Atomic number and Mass number – extra nuclear part – filling up of electrons – aufbau principle – s–p-d-f orbitals – electronic configuration – octet rule – electrovalent bond –NaCl formation – covalent bond – formation of ammonia	4 Hrs
	1.2 Acids and Bases: Properties of acids and bases - Lewis Theory – Advantages of Lewis Theory – pH and pOH – Definition – Numerical problems – Indicator – Definition and Examples only – Buffer solution – Definition – Types of buffer solution with examples – Application of pH in Industries.	4 Hrs
	1.3 Solutions: Definition – Methods of expressing concentration of solutions – Molarity, Molality, Normality, Mole fraction and Percentage by Mass – Simple problems.	4 Hrs
2	**2.1 Surface Chemistry:** Colloids - True solution and Colloidal solution – Definition – Differences – Types of colloids – Lyophilic and Lyophobic colloids – Differences – Properties – Tyndall effect, Brownian movement, Electrophoresis and Coagulation – Industrial applications of colloids – Smoke Precipitation by Cottrell's method, Purification of water, Cleansing action of soap, Tanning of leather and Sewage disposal and artificial rain.	4 Hrs
	2.2 Catalysis: Catalysis - Catalyst – Positive catalyst – Negative catalyst – Definition – Types of catalysis – Homogeneous and Heterogeneous – Promoter – Catalyst poison – Active centre - Definition – Characteristics of a catalyst – Industrial applications of catalysts.	4 Hrs
	2.3 Solid State: Structure of solids – Definition and example for ionic, molecular, covalent and metallic solids – unit cell – bcc, fcc, hcp packing of metals – examples and properties reflected by the packing of atoms.	4 Hrs

3	**3.1 Technology Of Water – I:** Sources of water – Reasons for depletion of underground water – Rain water harvesting (Basic ideas) – Advantages – Hard water and soft water – Hardness of water – Carbonate and Non-carbonate hardness – Methods of expressing hardness – mg/lit and ppm – Simple problems –Disadvantages of Hard water - Estimation of total hardness of water by EDTA method – Problems involving Total, Carbonate and Non-carbonate hardness in ppm - Disadvantages of using hard water in boilers – Scale formation, Corrosion of boiler metal, Caustic Embrittlement - Priming and Foaming. **3.2 Technology Of Water – II:** Softening of hard water – Ion-Exchange method and Reverse Osmosis method – Municipal water supply – Purification (Sedimentation, Filtration and Sterilization) –quality of potable water – parameters of potable water – pH – TDS – dissolved chlorine permissible limits – determination of e-coli (preliminary idea). **3.3 Water Management:** Conservation of water – Domestic, Agriculture and Industries.	5 Hrs 5 Hrs 2 Hrs
4	**4.1 Electrochemistry:** Electrolyte – Definition – Strong and Weak electrolytes – Examples – Electrolysis – Definition – Mechanism – Industrial application of Electrolysis – Electroplating – Process – Chrome plating – Electrochemical Cell – Definition –Definition – Galvanic Cell – Formation of Daniel Cell – Electrochemical Series – Definition and Significance. **4.2 Energy Sources:** Primary Battery – Secondary Battery - Definition and example – Construction, Working principle and Uses of Lead-acid Storage Cell – Non-conventional Energy Sources – Solar Cell – Fuel cell - Definition – working principle. **4.3 Nano technology:** Nano-particles – Definition – Properties - Area of application – Medicine, Electronics and Biomaterials – Fullerenes and its types.	4 Hrs 4 Hrs 4 Hrs
5	**5.1 Corrosion:** Definition – Types of Corrosion – Theories of corrosion – Galvanic Cell Formation Theory – Differential Aeration theory – Factors influencing the rate of corrosion. **5.2 Methods of Prevention of Corrosion:** Control of Environment – Alloying – Surface coatings – Metal coatings – Electroplating, Galvanization and Tinning – Inorganic coating – Anodizing – Cathodic Protection – Sacrificial Anode Method and Impressed Voltage Method. **5.3 Organic Coatings:** Paint – Definition – Components of Paints and their functions – Varnish – Definition – Preparation of Oil Varnish – Differences between Paint and Varnish – Special Paints – Luminescent Paints, Fire Retardant Paints, Aluminium Paints, Antifouling paints, Cement paints and Distemper.	4 Hrs 4 Hrs 4Hrs

Text Book:

1. Engineering Chemistry – I Tamil Nadu Text Book Corporation
2. Engineering Chemistry – Jain & Jain – Dhanpat Rai & Sons.
3. A Text Book of Engineering Chemistry – S.S. Dara – S. Chand Publication.

Reference Book:

1. Engineering Chemistry – Uppal – Khanna Publishers.
2. Chemistry – Higher Secondary – Second Year – Volume I & II – Tamil Nadu Text Book Corporation – 2018.
3. Environmental Chemistry – V P Kudesia – Pragati Publishers.
4. Rain water Harvesting – Hand Book – Chennai Metro Water.

Learning structure

Application:

Apply the knowledge in selecting methods and materials required for engineering purpose. Acquire knowledge about pH, TDS, Hardness of water and learn about removal of Hardness. Study of application of pH and Colloids. Apply the knowledge of electrochemistry to prevent corrosion leading to green environment.

Procedure:

Defining atom, chemical bonding, acids and bases, importance of pH, buffer and industrial application, concentrations of solutions.	Defining colloidal solutions, catalyst and solids and application of colloids and catalysts.	Defining Hardness, softness and study of removal of hardness, potable water and water management.	Defining electrochemical principles, energy resources and nano technology in various fields.	Defining corrosion and preventing them by both physical and electrochemical coatings.

Concept:

Understanding about chemical bonding types, pH and buffer action, strengths of solutions.	Understanding about colloids, catalyst and solids.	Understanding about the technology of water, removal of hardness and potable water.	Understanding electrochemistry, energy resources and nano technology.	Understanding about corrosion and preventing methods.

Facts:

Atomic structure and chemical bonding Acids and Bases Solutions	Surface chemistry Catalysis Solid State	Technology of Water – I & II Water Management	Electrochemistry Energy Sources Nano Technology	Corrosion Methods of prevention of corrosion Organic Coatings

END EXAMINATION - QUESTION PAPER PATTERN

N104 - ENGINEERING CHEMISTRY I

Time: 3 Hrs. **Max.Marks: 100**

PART A - **20 Questions to be answered out of 25 for 2 marks each.**

PART B - **All the 5 Questions to be answered**

Each question in PART B will contain 3 Sub questions, out of them 2 Sub questions is to be answered for 6 marks each.

Part A	**20 X 2**	**40 Marks**
Part B Descriptive answer type questions Each question in PART B will contain 3 Sub questions, out of them 2 Sub questions is to be answered for 6 marks each.	**5 X 2 X 6**	**60 Marks**
Total		**100 Marks**

Out of the 3 Sub questions in PART B, one sub question must be on problem based to test the analytical ability/logical ability /diagnostic ability/conceptual ability relevant to that subject content. Equal importance is to be given to whole syllabus.

N-SCHEME

(Implements from the Academic Year 2019-2020 onwards)

Course Name :**Diploma in Mechanical Engineering**
Subject code : **N5105**
Semester :I
Subject Title :**ENGINEERING GRAPHICS I**

TEACHING AND SCHEME OF EXAMINATION:

No. of weeks per semester: 14 weeks

Subject	Instruction		Examination			
	Hours / Week	Hours / Semester	Marks			Duration
			Internal Assessment	End Examination	Total	
ENGINEERING GRAPHICS I	5Hrs	70Hrs	25	100*	100	3 Hrs

* Examination will be conducted for 100 marks and it will be reduced to 75 marks.

Topics and Allocation of Hours

Sl.No	Topic	Time
1	Drawing office practice, Lettering and Dimensioning	11Hrs
2	Geometric Construction and Construction of Conics	14Hrs
3	Construction of Polygons and Special curves	17Hrs
4	Projection of Points, Straight lines and Solids	20Hrs
5	Practice on AutoCAD (Basic commands)	08Hrs
	Total	**70Hrs**

RATIONALE:

Engineering graphics is a basic subject for Mechanical and Civil in Diploma Engineering. Since engineering drawing is considered as the language of engineers, the proper understanding and practice is required with proper use of instruments.

This subject is aimed at providing basic understanding of the fundamentals of Engineering Drawing; mainly visualization, graphics theory, standards of drawing, the tools of drawing and the use of drawings in engineering applications.

The topics covered are based on the syllabus for Diploma studies in engineering. The subject is planned to include sufficient practices which would help the student in visualization of two dimensional objects and developing the drawing.

The chapters are arranged in sequence and starts from the basic concepts of lettering, dimensioning, geometrical constructions, conic sections& engineering curves,

proceeds to the principles of projection techniques. By the end of the subject it is expected that the students would be matured to visualize any engineering component by reading an engineering drawing.

OBJECTIVES:

At the end of the subject, the students will be able to,

- Understand the importance of drawing.
- Identify and use the drawing instruments.
- Practice the rules and methods of dimensioning.
- Acquire knowledge about geometric construction.
- Construct conic curves.
- Acquire knowledge about the construction of special curves.
- Draw the projection of points and straight lines.
- Draw the projection of solids.
- Draw the geometric figures using basic AutoCAD commands.

N5105 - ENGINEERING GRAPHICS I
DETAILED SYLLABUS

Contents: **Theory**

Unit	Name of the Topic	Hours
I	**DRAWING OFFICE PRACTICE, LETTERING AND DIMENSIONING** **1. 1. Drawing office practice** Importance of engineering drawing as a graphic communication – drawing practice as per BIS code - drawing instruments: drawing board, mini drafter, compass, divider, protractor, drawing sheets, drawing pencils, set squares, etc.,-title block – layout and folding of drawing sheets. **1. 2. Lettering** Lettering and numbering as per BIS - importance of legible lettering and numbering – single stroke letters – slanting letters - upper case and lower case letters - general procedures for lettering and numbering - height of letters – guidelines - practices. Scales –Study of scales – full size scale, reducing scale and enlarging scale. **1. 3. Dimensioning** Dimensioning – Need for dimensioning – dimensioning terms and notations as per BIS –Dimension line, Extension line and Leader line – Dimensioning systems - Methods of placement of dimensions – Unidirectional and aligned systems – Important dimensioning rules – dimensioning of common features – diameters, radii, holes, chamfers – addition of letters and symbols – parallel, chain and progressive dimensioning – practice of dimensioning the given drawing as per BIS code – Exercises(One view of the object).	**11**
II	**GEOMETRIC CONSTRUCTIONS AND CONSTRUCTION OF CONICS** **2.1 Geometric Constructions** Geometric constructions: Bisect straight line – bisect an arc – bisect an angle – divide a straight line into any number of equal parts – divide the circle into number of equal divisions – construct an arc touching two lines at any angle – construct an arc touching two arcs – construction by inscribe and circumscribe a circle and by angle. **2.2 Construction of conics** **Conics**: Conic sections - Definition of locus, focus, directrix, axis, vertex, eccentricity – practical applications of ellipse, parabola and hyperbola. **Ellipse**: Construction of ellipse by concentric circle method, rectangular method when major and minor axis are given and	**14**

	Eccentricity method when focus and directrix are given – drawing tangent and normal – exercises in practical applications. **Parabola**: Construction of parabola by rectangular method, parallelogram method when major and minor axis are given and eccentricity method when focus and directrix are given– drawing tangent and normal – exercises in practical applications. **Hyperbola**: Construction of hyperbola by eccentricity method when focus and directrix are given – drawing tangent and normal – exercises in practical applications.	
III	**CONSTRUCTION OF POLYGONS AND SPECIAL CURVES** **3.1 Construction of Polygons** Construction of regular polygon: triangle, square, pentagon and hexagon – various positions – side of the polygon is parallel, perpendicular and inclined to principle planes. **3.2 Construction of Special curves** Geometric curves – Definition, practical applications and construction of cycloid – epicycloid – hypocycloid – involute – archimedian spiral – helix – exercises.	**17**
IV	**PROJECTION OF POINTS, STRAIGHT LINES AND SOLIDS** **4.1 Projection of points.** Projection of points – position of a point on four quadrants and on the reference planes – system of notation – place a point on four quadrants with different distances – exercises (minimum 5 points). **4.2 Projection of straight lines.** Projection of straight lines – Line in the first quadrant and on the reference planes –parallel to one plane and perpendicular to other plane – inclined to one plane and parallel to the other plane – parallel to both the planes –Simple exercises. **4.3 Projection of Solids** Introduction – important terms – classification of solids – triangular, cube, pentagonal and hexagonal prisms and pyramids – solids of revolution – cylinder and cone – projection of solids in simple positions – axis parallel to one plane and perpendicular to other plane.	**20**
V	**PRACTICE ON AUTOCAD (BASIC COMMANDS)** **5.1 Practice on AutoCAD** To draw geometrical figures using line, circle, arc, polygon, ellipse, rectangle, erase and other editing commands.	**08**

Text Books

1. Bhatt N.D. and Panchal V.M., "Engineering Drawing", Charotar Publishing House, 50th Edition, 2010.
2. Gill P.S., "Engineering drawing", S.K. Kataria& Sons.

Reference Books

1. Gopalakrishnan.K.R., "Engineering Drawing", (Vol.I and Vol.II), Dhanalakshmi publishers, Edition 2, 1970.
2. Venugopal.K, Sreekanjana G, "Engineering Graphics", New Age International Publishers.
3. K V Nataraajan" A Text Book of Engineering Drawing".
4. Besant Agarwal, C M Agarwal "Engineering drawing", Tata McGraw Hill Education Private Limited.
5. Barkinson& Sinha, "First Year Engineering Drawing", Pitman Publishers.

Note for class assessment:

Category	Minimum criteria for class assessment	
	No. of Drawing sheets	No. of Exercises
1.2 Lettering	1	Upper case, lower case, slanting letters and numerals – each 5 sentences with different heights
1.3 Dimensioning	1	8 – 2D drawings
2.1 Geometric Constructions	1	12
2.2 Construction of conics	2	7
3.1 Construction of Polygons	1	12
3.2 Construction of Special curves	2	6
4.1 Projection of points	1	2
4.2 Projection of straight lines	1	10
4.3 Projection of Solids	1	6

END SEMESTER EXAMINATION QUESTION PAPER PATTERN

N5105 - ENGINEERING GRAPHICS I

Time: 3 Hrs **Max Marks: 100**

Note:1. Answer all the questions in the drawing sheet only.

2. Assume missing dimensions suitably, if required.

PART-A **4 x 5 = 20**

Answer any four questions. Each question carries five marks.

Note: Five questions will be asked (1 to 5). One question from 1.2, 2.1, 3.1, 4.1 and 4.2. (Lettering, Geometric Constructions, Construction of polygon, Projection of Points and Straight lines.**)**

PART-B **4 x 20 = 80**

Answer any four questions. Each question carries twenty marks.

Note: Six questions will be asked (6 to 11). Atleast one question can be asked from each unit.

TOTAL **100 Marks**

INTERNAL MARKS:

Sl.No	Particulars	Marks
1	Evaluation of class work – (Minimum 10 plates)	15
2	Continuous assessment tests (Average of two tests) (2 Hours duration)	5
3	Model Examination (3 Hours duration)	5
	TOTAL	**25**

N-SCHEME
(Implements from the academic year 2019 – 2020 onwards)

Course Name : **All branches of Diploma in Engineering**
Subject Code : **N106**
Semester : **I**
Subject Title : **APPLIED SCIENCE PRACTICAL I**

TEACHING AND SCHEME OF EXAMINATION

Number of weeks per semester : 14 weeks

Subject	Instructions		Examination			
	Hours/ Week	Hours / Semester	Marks			Duration
			Internal Assessment	Board Examination	Total	
APPLIED SCIENCE PRACTICAL I	4 Hrs.	56 Hrs.	25	100*	100	3 Hrs.

* Examination will be conducted for 100 Marks and it will be reduced to 75 Marks.

PHYSICS

RATIONALE :

In Diploma level engineering education skill development plays a vital role. The skill development can be achieved by giving proper hands on experience in handling of various instrument, apparatus and equipment. This is accomplished by doing engineering related experiment in practical classes in various laboratories.

GUIDE LINES :

1. In order to develop best skills in handling Instrument / Equipment and taking readings in the practical classes, every two students should be provided with an individual experimental setup / equipment / instrument for doing experiment in the laboratory.
2. All the experiment should be completed and given in the question paper for the practical examination.
3. Students should maintain observation and record note book individually. The same has to be submitted for the Practical Examination.
4. Proper safety arrangement should be made as per the requirement.

LIST OF EXPERIMENTS WITH OBJECTIVES :

1. MICROMETER (SCREW GAUGE).

To measure the thickness of the given irregular glass plate using micrometer. To determine the area of the glass plate using a graph sheet and to calculate the volume of the glass plate.

2. VERNIER CALIPERS.

To measure the length and diameter of the given solid cylinder using vernier calipers and to calculate the volume of the solid cylinder.

3. PARALLELOGRAM LAW.

To verify the parallelogram law using concurrent force..

4. STOKES METHOD.

To determine the coefficient of viscosity of a highly viscous liquid.

5. SONOMETER.

To determine the frequency of the given tuning fork.

Note For Examination :

1. Individual equipment should be provided for the batch strength. The same experiment should not be kept more than four students.
2. All the experiments must be given in all the batches.
3. Any one experiment should be given by lot for the Practical Examination.
4. The external examiner should verify the availability of the equipment for the batch strength before the commencement of Practical Examination.
5. Properly evaluated record note book should be submitted for the Practical Examination.

ALLOCATION OF MARKS

Practical Examination : 100 Marks

Content	Marks Allotted
Formula & Diagram	15
Tabulation with proper units	5
Observation (including taking readings)	20
Calculation	5
Result	5
Total Marks	**50**

Internal Assessment : 25 Marks

Content	Marks Allotted
Observation	15
Record	10
Total	**25**

LIST OF EQUIPMENT

1. MICROMETER (SCREW GAUGE).

To measure the thickness of the given irregular glass plate using micrometer. To determine the area of the glass plate using a graph sheet and to calculate the volume of the glass plate.

2. VERNIER CALIPERS.

To measure the length and diameter of the given solid cylinder using vernier calipers and to calculate the volume of the solid cylinder.

3. PARALLELOGRAM LAW.

To verify the parallelogram law using concurrent force..

4. STOKES METHOD.

To determine the coefficient of viscosity of a highly viscous liquid.

5. SONOMETER.

To determine the frequency of the given tuning fork.

MODEL QUESTION PAPER (PHYSICS)

1. Measure the thickness of the given irregular glass plate using micrometer. Determine the area of the glass plate using a graph sheet and calculate the volume of the glass plate.
2. Measure the length and diameter of the given solid cylinder using Verniercaliper and then calculates the volume of the solid cylinder.
3. Verify the parallelogram law of forces using concurrent forces.
4. Determine the coefficient of viscosity of a highly viscous liquid by stroke's method.
5. Determine the frequency of the given tuning fork using sonometer.

CHEMISTRY

OBJECTIVES:

1. At the end of the program the student will have knowledge about volumetric analysis in acidimetric, alkalimetric and permanganometric titration and their applications.
2. To get knowledge of estimation of total hardness, temporary and permanent hardness in the hard water sample.
3. To get knowledge about measurement of TDS, pH and to calculate Hydrogen ion concentration in a solution.
4. To get knowledge of estimation of dissolved chlorine in a water sample.

Intellectual Skills:

1. Carrying out Volumetric titrations and calculation of masses
2. Knowing units for Concentrations of solutions.

Motor Skills:

1. Measure quantities accurately
2. Observe chemical reactions
3. Handle the apparatus carefully

CONTENTS

Note:

1. The student should be provided with individual facility to complete the experiment.
2. Proper safety arrangement should be made for the laboratory.
3. Proper instruction and care should be given while handling chemicals and acids.

Acidimetry and Alkalimetry:

1. Estimate the amount of sulphuric acid present in -------ml of a given solution using standard solution of HCl of strength ------N and an approximately decinormal solution of NaOH.

Permanganometry:

2. Estimation of Iron in ----ml of the given ferrous sulphate solution using a standard solution of ferrous ammonium sulphate of strength ----N and an approximately decinormal solution of potassium permanganate as link solution.

Water Analysis:

3. Water analysis for dissolved chlorine.

4. Estimation of total hardness of a water sample using EDTA.
5. Water quality testing, pH, TDS (3 Sample)

Determination of pH using a pH meter and calculation of hydrogen ion Concentrations in the solutions and TDS using TDS meter (For Three given samples). (This question may be given to any two students per batch)

Note For Examination:

1. Individual apparatus / equipment should be provided for the batch strength. The same experiment should be given with different Skilled value in a batch.
2. Determination of pH may be given to any two students per batch.
3. All the experiments must be given in all the batches.
4. Any one experiment should be given by lot for the End Practical Examination.
5. The external examiner should verify the availability of the apparatus / equipment for the batch strength before the commencement of Practical Examination.
6. Properly evaluated record note book should be submitted for the End Practical Examination.

DETAILED ALLOCATION OF MARKS

END PRACTICAL EXAMINATION: 50 MARKS

VOLUMETRIC ANALYSIS		**DETERMINATION OF PH & TDS**	
CONTENT	**MARK ALLOTED**	**CONTENT**	**MARK ALLOTED**
Short procedure	4	Answer for short question on pH & TDS	4
Titration – I	15	Determination of pH	15
Titration – II	15	Calculation of $[H^+]$	12
Calculations 3 * 4	12	Determination of TDS	15
Viva – Voce	4	Viva – Voce	4
Total Marks	50	Total Marks	50

Guidelines for Evaluation

Titration value accuracy for Titration I & II		**pH Value accuracy**	
Accuracy	**Marks**	**Accuracy**	**Marks**
± 0.2 ml	15	± 0.2	5
Above ± 0.2 ml to ± 0.4 ml	11	Above ± 0.2 to ± 0.4	3
Above ± 0.4 ml to ± 0.6 ml	7	Above ± 0.4	2
Above ± 0.6 ml	3		

Internal Assessment:

Content	Mark Allotted
Observation	15
Record	10
Total Marks	**25**

MODEL QUESTION PAPER (CHEMISTRY)

MODEL 1: **3 Hours**

Estimate the mass of Iron present in whole of the given ferrous sulphate solution using a standard solution of ferrous ammonium sulphate of strength 0.1N and an approximately decinormal solution of potassium permanganate.

MODEL 2: **3 Hours**

Calculate the total hardness of the given sample of water using a standard hard water solution of molarity 0.01M and an approximately decimolar solution of EDTA.

MODEL 3: **3 Hours**

Determine the pH of three given samples using pH meter and calculate the hydrogen ion concentration of the samples, determine the TDS of the same sample. (Any two students per batch).

APPARATUS / EQUIPMENTS REQUIRED

Batch Strength: 30 Students

Sl.No	Name of the item	Quantity (Nos.)
1	Beaker 100 ml	1
2	Burette 50 ml	1
3	Burette stand	1
4	Conical flask 250 ml	1
5	Funnel	1
6	Pipette 20 ml	1
7	Porcelain Tile	1
8	Standard Flask 100 ml	1
9	Wash Bottle	1
10	pH meter	1
11	TDS meter	1
12	Solutions	

N-SCHEME

(Implements from the Academic Year 2019-2020 onwards)

Course Name : **Diploma in Mechanical and Civil Engineering**
Subject code : **N107A**
Semester : **I**
Subject Title: **WORKSHOP PRACTICE**

TEACHING AND SCHEME OF EXAMINATION:

No. of weeks per semester: 14 weeks

Subject	Instructions		Examination			
	Hours / Week	Hours / Semester	Marks			Duration
			Internal Assessment	End Examination	Total	
WORKSHOP PRACTICE	4Hrs	56Hrs	25	100*	100	3 Hrs

* Examination will be conducted for 100 Marks and it will be reduced to 75 Marks.

Topics and Allocation of Hours

Sl.No	Sections	Time
1	Fitting Section	20Hrs
2	Wiring Section	18Hrs
3	Plumbing Section	18Hrs

RATIONALE:

- Workshop practice is a basic subject for Mechanical and Civil in Diploma Engineering.
- This subject is planned to familiar with the basic tools and measuring instruments in general workshop.
- To understand and familiar with the shop floor practices and safety procedures.
- The fitting section is focused on the metal works such as marking, cutting, filing, drilling and tapping operations.
- The wiring section is aimed to understand the basic wiring, wiring standards, conventions and basic circuits.
- The plumbing section is to handle the basic plumbing tools and practices. The importance and various methods of rain water harvesting to improve the ground water level.
- The subject is planned to include sufficient practices which would help the students to understand the principles of basic industrial and domestic applications.

N107A - WORKSHOP PRACTICE
DETAILED SYLLABUS

1. FITTING SECTION **20Hrs**

Objective:

At the end of this course, the students will able to

- ✓ Know basic workshop processes and general safety precautions inside the shop.
- ✓ Read and interpret job drawings.
- ✓ Identify, select and use various marking, measuring, cutting and filing tools.
- ✓ Different fitting operation like marking, cutting, filing, drilling, tapping etc.
- ✓ Able to operate drilling machine and work holding devices.
- ✓ Produce jobs as per specified dimensions and inspect the job.

Skills:

- ➢ Ability to read job drawing.
- ➢ Ability to identify and select proper material, tools, equipment and machine.
- ➢ Ability to set tools, work piece and machines for desired operations.
- ➢ Ability to use safety equipment and follow safety procedures during operations.
- ➢ Ability to complete job as per job drawing in allotted time.
- ➢ Ability to inspect the job for confirming desired dimensions and shape.
- ➢ Ability to acquire hands-on experience.

Exercises

Note: (i) Practices should be given to cover all the operations. All the students should be given sufficient practice to do the above exercises for the End practical examinations.

(ii) Importance should be given for the dimensions.

Exercise 1: Raw material: 75 mm X 50 mm X 3 mm thick M.S. flat

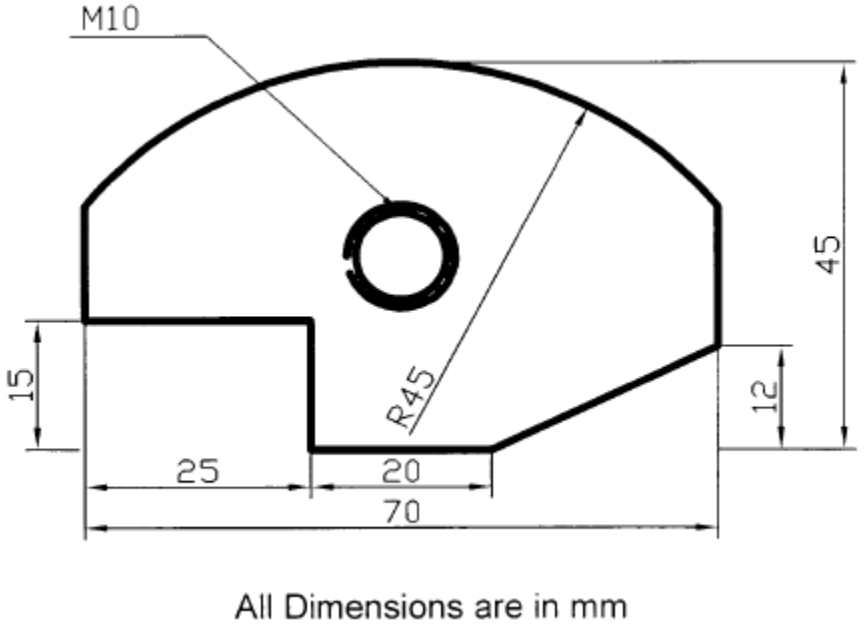

Exercise 2: Raw material: 75 mm X 50 mm X 3 mm thick M.S. flat

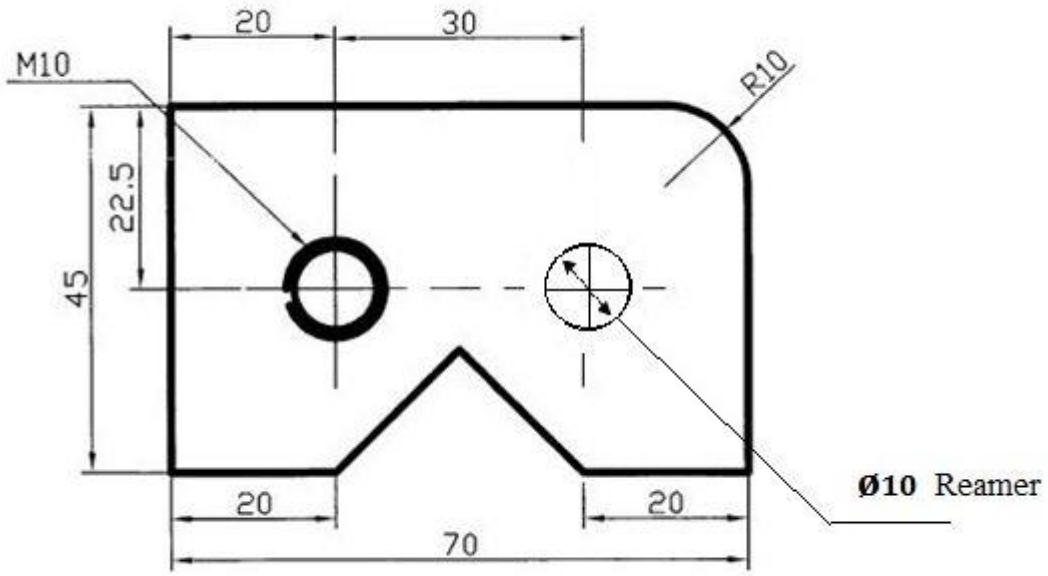

All Dimensions are in mm

Exercise 3: Raw material: 75 mm X 50 mm X 3 mm thick M.S. flat

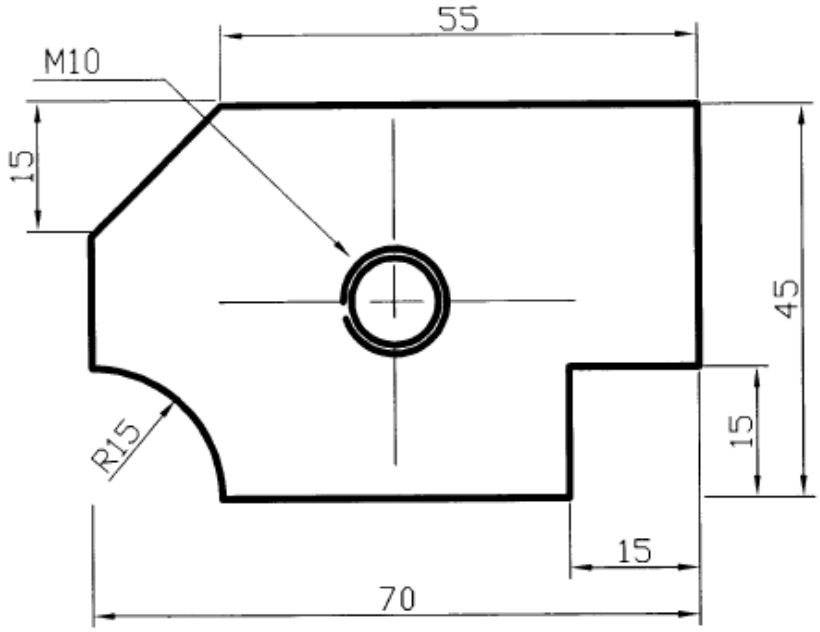

All Dimensions are in mm

2. WIRING SECTION 18Hrs

Objective:

At the end of this course, the students will able to

- ✓ Identify, select and use various wires and colour codes.
- ✓ Adopt safety practices while working with power supply.
- ✓ Able to know about the basic tools and measuring equipment.
- ✓ To understand the importance of earthing.
- ✓ Identify and make use of different electrical fittings and accessories.
- ✓ Read and understand circuit diagram and symbols.
- ✓ Practice simple wiring based on the circuit.
- ✓ Ability to use multimeter for measurements.

Skills:

- ➢ Ability to circuit diagram.
- ➢ Ability to identify and select proper wires and tools.
- ➢ Ability to follow safety procedures during work.
- ➢ Ability to complete connections as per circuit in allotted time.
- ➢ Ability to check the connections and measure the voltage.
- ➢ Ability to acquire hands-on experience.

Exercises

Note: (i) Students should draw the circuit diagram and collect the components according to their requirement.

(ii) The connections should be done by the student in a board and checked with power supply.

(iii) Suitably safety precautions should be made accordingly.

Exercise 4:

Connect the LED bulb, Tube light and One plug point socket with individual switch control in a board.

Exercise 5:

Connect two lamps in series and parallel switch control in a board.

Exercise 6:

Connect staircase wiring for a LED bulb using two-way switches in a board.

Exercise 7:

Connect a LED bulb using EB supply and UPS supply in a board using changeover switch. Check the AC and DC Voltage using multimeter.

3. PLUMBING SECTION 18Hrs

Objective:

- ✓ Identify, select and use various plumbing tools and components.
- ✓ To install pipes and accessories.
- ✓ To repair or replace components in case of water leakages.
- ✓ To make use of GI and PVC pipes, pipe fittings and accessories.

- ✓ To know about different plumbing layouts and pipe joints.
- ✓ Pipe threading using standard die sets.

Skills:

- ➢ Ability to read layout diagram.
- ➢ Ability to identify and select proper pipes, accessories and tools.
- ➢ Ability to follow safety procedures during work.
- ➢ Ability to complete connections as per layout in allotted time.
- ➢ Ability to check the leakages in connections.
- ➢ Ability to acquire hands-on experience.

Note: (i) Students should draw the block diagram and collect the components according to their requirement.

(ii) The connections should be done by the student and checked with water supply.

(iii) Suitably provisions (Board / Stand) should be made to fix the components accordingly.

Exercise 8:

Install a sink / washbasin with tap using PVC pipe and accessories such as gate valve, bend / elbow, tee, coupling, water meter, etc., with draining system.

Exercise 9:

Provide the hot water tap connection from the water heater using GI pipe with required fittings. Form threads for connecting pipes.

Exercise 10:

Provide the shower connection with mixer from hot water and cold water using CPVC pipes and accessories.

Exercise 11:

Lay pipes to collect rain water from various types of roof and install rain water harvesting system.

Note For Examination:

1. The students should be given proper training in all the sections. All the exercises should be completed. The students should maintain observation and record notebook for the concerned trades and submit during the Board Practical Examinations.
2. Any two exercises should be given for examination. One exercise from fitting and another exercise from either wiring or plumbing.
3. All exercises should be given in the question paper and students are allowed to select by lot. No fixed time allotted for each section and students have liberty to do the examination for 3 Hrs.
4. Required instruments / equipment / tools should be available for each batch strength as prescribed during examination.
5. The external examiner should verify the availability of the equipment for the batch strength before the commencement of Practical Examination.

DETAILED ALLOCATION OF MARKS (MECHANICAL – FITTING COMPULSARY)

End Practical Examination: 100 Marks

Description		Mark Allotted
Fitting Section		
Marking & Cutting		10
Filing / Dimensions		30
Finish		10
Wiring Section	**Plumbing Section**	
Procedure / Circuit diagram	Procedure / Layout	15
Connection / Checking	Connection / Checking	20
Result / Finish	Result / Finish	10
Viva voce		05
Total Marks		**100**

DETAILED ALLOCATION OF MARKS (CIVIL – PLUMBING COMPULSARY)

End Practical Examination: 100 Marks

Description		Mark Allotted
Plumbing Section		
Procedure / Layout		10
Connection / Checking		30
Result / Finish		10
Wiring Section	**Fitting Section**	
Procedure / Circuit diagram	Marking & Cutting	15
Connection / Checking	Filing / Dimensions	20
Result / Finish	Finish	10
Viva voce		05
Total Marks		**100**

Internal Assessment: 25 Marks

Content	Mark Allocated
Observation	15
Record	10
Total Marks	**25**

N - SCHEME

(Implemented from the Academic year 2019- 2020 onwards)

Course Name : **All branches of Diploma in Engineering**
Subject code : **N201**
Semester : **II**
Subject Title : **COMMUNICATION ENGLISH – II**

TEACHING AND SCHEME OF EXAMINATION

Number of weeks per semester: 14 weeks

Subject	Instructions		Examination			
	Hours/ Week	Hours/ Semester	Marks			Duration
			Internal Assessment	Board Examination	Total	
COMMUNICATION ENGLISH - II	5 Hrs.	70 Hrs.	25	100 *	100	3 Hrs

*Total marks secured in Board Examination for 100 Marks is to be converted into 75.

Topics and Allocation of Hours:

UNIT	TOPIC	TIME
1	Functional Grammar and Usage	14
2	English for Enrichment	15
3	Situational English	16
4	Creative English	16
5	English for scholarly presentation/ fluency	9
	Total	**70Hrs**

N201 - COMMUNICATION ENGLISH – II
DETAILED SYLLABUS

Contents: **Theory**

UNIT	NAME OF THE TOPICS	HOURS
1	**Functional Grammar and Usage** 1. Application of **Helping** Verbs – have, has, had 2. Negative Formation(No, Never, Nothing, Hardly, Seldom, No longer, None, Nevertheless, Nowhere, Neither……nor) 3. Use of **Co-ordinating Conjunctions**(FAN BOYS) 4. **Question tags** 5. **Framing WH Questions** 6. **Identifying the clauses** 7. Punctuation 8. **Linkers**	**14**
2	**English for Enrichment** 9. Unscramble words (Four lettered words) 10. Collocation – Noun with Verb, Adjective with Noun 11. **subject – Verb Agreement** 12. **Infinitive and Gerund** 13. **Transformation of sentences (Interrogative into Assertive)**. 14. Jumbled sentences.	**15**
3	**Situational English** 1. e- mail for official communication 2. Letter writing - **Personal Communication** (Inviting friend for a function, Asking permission for a tour, Thanks giving for a gift) 3. **Writing Instructions** 4. Rewriting the paragraph after making necessary corrections 5. Cause and Effect 6. **Note Making.**	**16**
4	**Creative English** 1. The Language Game: Word Puzzle Grid 2. Notice writing for the given situations 3. Slogan writing 4. Expressing Purposes 5. Info graphics Comprehension 6. **Check List.**	**16**
5	**English for Scholarly Presentation / Fluency** 1. "An Astrologer's Day by R.K.Narayan 2. "Ozymandias" by P.B.Shelley 3. "Stopping by Woods on a Snowy Evening" by Robert Frost.	**9**

Board Examination - Question Paper Pattern

N201 - COMMUNICATION ENGLISH – II

Time: 3 Hrs. **Max. Marks: 100**

PART- A GRAMMAR (40 marks)

I. 1) Answer any twelve questions. **(12X3=36)**

1	a	
	b	
	c	
2	a	
	b	
	c	
3	a	
	b	
	c	
4	a	
	b	
	c	
5	a	
	b	
	c	
6	a	
	b	
	c	
7	a	
	b	
	c	
8	a	
	b	
	c	
9	a	
	b	
	c	
10	a	
	b	
	c	
11	a	
	b	
	c	
12	a	
	b	
	c	
13	a	
	b	
	c	

2) Rearrange the jumbled sentences in the correct order. (4 marks)

PART- B (5 X 4 = 20 Marks)

II. Answer any five of the following:

II	**a**	
	b	
	c	
	d	
	e	
	f	

PART- C (5 X 4 = 20 Marks)

III. Answer any five of the following:

III	**a**	
	b	
	c	
	d	
	e	
	f	

PART- D (5 X 2 = 10 Marks)

IV. Answer the following questions in one or two sentences:

A	**a**	
	b	
	c	
	d	
	e	

Write the following in about 50 words: (2 X 5 =10 Marks)

B	**a**	
	b	

N- SCHEME

(Implements from the Academic year 2019-2020 onwards)

Course Name **: All branches of Diploma in Engineering**
Subject Code **: N202**
Semester **: II**
Subject Title : **ENGINEERING MATHEMATICS II**

TEACHING AND SCHEME OF EXAMINATION

Number of weeks per semester: 14weeks

Subject	Instructions		Examination			
	Hours / Week	Hours / Semester	Marks			Duration
ENGINEERING MATHEMATICS II	7 Hrs.	98 Hrs.	Internal Assessment	Board Examination	Total	
			25	100*	100	3 Hrs.

* Examination will be conducted for 100 Marks and it will be reduced to 75 Marks.

Topics and Allocation of Hours:

UNIT	Topic	Time
1	Application of Vectors	20 Hrs.
2	Probability Distribution	20 Hrs.
3	Application of Differentiation	19 Hrs.
4	Application of Integration	19 Hrs.
5	Differential Equations	20 Hrs.
	Total	**98Hrs.**

N202 - ENGINEERING MATHEMATICS II
DETAILED SYLLABUS

Contents: **Theory**

UNIT	NAME OF TOPIC	Time
I	**APPLICATION OF VECTOR** **1.1 APPLICATION OF SCALAR AND VECTOR PRODUCT OF TWO VECTORS:** Definition of Work done by force, moment of a force. Simple Problems. **1.2 PRODUCT OF THREE VECTORS:** Definition of scalar product of three vectors – Geometrical meaning - Coplanar vectors. Simple Problems. Definition of vector product of three vectors. Simple Problems. **1.3 PRODUCT OF FOUR VECTORS:** Definition of Scalar and Vector Product of Four Vectors. Simple Problems.	6 Hrs. 7 Hrs. 7 Hrs.
II	**PROBABILITY DISTRIBUTION** **2.1 RANDOM VARIABLE:** Definition of Random Variable – Types – Probability mass function – Probability density function. Simple Problems. **2.2 MATHEMATICAL EXPECTATION:** Mathematical Expectation of discrete random variable, mean and variance. Simple Problems. **2.3 BINOMIAL AND POISSION DISRTRIBUTION:** Definition of Binomial and Poission distribution. where x=0, 1, 2.. Statement only – Expressions of Mean and variance - Simple problems. **2.4 Curve Fitting:** Fitting a straight line using least square method (Equations Reduced to straight line is not to be included).	5 Hrs. 6 Hrs. 6 Hrs. 3 Hrs.
III	**APPLICATION DIFFERENTIATION** **3.1 VELOCITY AND ACCELERATION:** Definition of Velocity and Acceleration – Simple Problems. **3.2 TANGENT AND NORMAL:** Definition of Tangent and Normal – Simple Problems. **3.3 MAXIMA AND MINIMA:** Definition of increasing and decreasing functions and turning points. Maxima and Minima of single variable only – Simple Problems.	6 Hrs. 7 Hrs. 6 Hrs.
IV	**APPLICATION OF INTEGRATION** **4.1 INTEGRATION BY PARTS:** Integrals of the forms: $\int x^n \, logx dx$, and $\int logx dx$. Simple Problems. **4.2 BERNOULLI'S FORMULA:** Evaluation of Integrals $\int x^m \sin nx \, dx$, $\int x^m \cos nx \, dx$ and $\int x^m \, e^{nx} \, dx$, when m ≤ 2 Simple Problems. **4.3 DEFINITE INTEGRALS** Definition of definite integral. Properties of definite integrals. Area of a circle and Volume of a sphere and cone – Simple problems.	5 Hrs. 6 Hrs. 8 Hrs.

V	**DIFFERENTIAL EQUATIONS** **5.1 FIRST ORDER DIFFERENTIAL EQUATION:** Solution of first order variable separable type differential equation. Simple problems. **5.2 SECOND ORDER DIFFERENTIAL EQUATION – I:** Solution of second order differential equation with constant co-efficient in the form a $\frac{d^2y}{dx^2}$+ b $\frac{dy}{dx}$ + cy = 0 where a , b and c are constants . Simple Problems. **5.3 SECOND ORDER DIFFERENTIAL EQUATION – II :**Solution of second order differential equation with constant coefficients in the form a $\frac{d^2y}{dx^2}$+ b $\frac{dy}{dx}$ + cy =f(x) where a , b and c are constants and f(x)=ke^{mx} . Simple Problems.	6 Hrs. 7 Hrs. 7 Hrs.

Text Book:

1. Mathematics for Higher Secondary – I year and II year (Tamil Nadu Text BookCorporation)

Reference Book:

1. Engineering Mathematics - Dr.M.K.Venkat raman, National Publishing Co, Chennai
2. Engineering Mathematics – Dr.P.Kandasamy & Others, S.Chand& Co Ltd, NewDelhi.

END EXAMINATION - QUESTION PAPER PATTERN
N202 - ENGINEERING MATHEMATICS II

Time: 3 Hrs. **Max.Marks: 100**
PART A - **20 Questions to be answered out of 25 for 2 marks each.**
PART B - **All the 5 Questions to be answered**
Each question in PART B will contain 3 Sub questions, out of them 2 Sub questions is to be answered for 6 marks each.

Part A	**20 X 2**	**40 Marks**
Part B Descriptive answer type questions Each question in PART B will contain 3 Sub questions, out of them 2 Sub questions is to be answered for 6 marks each.	**5 X 2 X 6**	**60 Marks**
Total		**100 Marks**

Out of the 3 Sub questions in PART B, one sub question must be on problem based to test the analytical ability/logical ability /diagnostic ability/conceptual ability relevant to that subject content. Equal importance is to be given to whole syllabus.

N-SCHEME
(Implements from the academic year 2019 – 2020 onwards)

Course Name : **All branches of Diploma in Engineering**
Subject Code : **N203**
Semester : **II**
Subject Title : **ENGINEERING PHYSICS II**

TEACHING AND SCHEME OF EXAMINATION

Number of weeks per semester : 14 weeks

Subject	Instructions		Examination			
	Hours/ Week	Hours / Semester	Marks			Duration
ENGINEERING PHYSICS – II	5 Hrs.	70 Hrs.	Internal Assessment	Board Examination	Total	
			25	100 *	100	3 Hrs.

*Examination will be conducted for 100 Marks and it will be reduced to 75 Marks.

Topics and Allocation of Hours :

Unit	Topic	Time
1	Heat	12 Hrs.
2	Thermodynamics, Liquefaction Of Gases And Non-Conventional Energy	12 Hrs.
3	Light And Remote Sensing	12 Hrs.
4	Electricity	12 Hrs.
5	Physics Of The Atom And Ultrasonics	12 Hrs.
Revision + Test + Model Exam		10 Hrs.
Total		**70 Hrs.**

RATIONALE:

The Exponential growth of Engineering and Technology has benefited the mankind with extreme sophistication and comport. To sustain this development, continuous research and development should take place not only in Engineering and Technology but also in Basic Science such as Physics.

The Various divisions of Physics like Heat, Optics, Acoustics, Semiconductors Physics, Nuclear Physics, Energy Studies, Materials Science, etc provide the foundation by enlightening the Fundamental facts, Principles, Laws and Correct sequence of events to develop the engineering and Technology field for the prosperity of human beings.

OBJECTIVES:

At the end of the study of II Semester the student will be able to

- Analyze the relation between pressure, volume and temperature of gas. And to interpret the results.

- Understand the process of isothermal and Adiabatic changes of gas and basic laws of thermodynamics.
- Acquire knowledge about liquefaction process of gases.
- Realize the inevitable need for tapping Alternate energy to address the looming energy crisis.
- Identify the characteristics and properties of LASER, Optical fiber and its applications
- Acquire broader ideas about the process of remote sensing in tapping the earth resources for human benefits.
- Identify the characteristics, properties and production of X-Rays, Photoelectric effect & Ultrasonics and its applications.
- Acquire knowledge about heating, chemical and magnetic effect of electric current.
- Gain broader ideas of capacitors.
- Identify, analyze and solve Engineering field related problems involving expressions derived in tall the above topics.

N203 - ENGINEERING PHYSICS II
DETAILED SYLLABUS

Contents : **Theory**

Unit	Name of the Topic	Hours
1	**HEAT** **1.1 TRANSFER OF HEAT** Concept of Heat and Temperature – Centigrade, Fahrenheit and Kelvin Scales Of Temperature Measurement – Conduction, Convection and Radiation – Definitions and Explanations – Properties of Thermal Radiation. **1.2 KINETIC THEORY OF GASES** Postulates – Mean Square Velocity and Root Mean Square (RMS) Velocity Of Molecules – Definitions and Expressions – Expression for the Pressure of a Gas on the Basis of Postulates of Kinetic Theory of Gases- Relation between pressure and kinetic energy of the gas- Simple Problems based on The Expression for the Pressure of a Gas **1.3 SPECIFIC HEAT CAPACITY** Specific Heat Capacity of a Substance (Solids And Liquids) – Definition – Specific Heat Capacity of a Gas at Constant Volume – Specific Heat Capacity of a Gas at Constant Pressure – Ratio of Specific Heat Capacities – Derivation of Mayer's Relation – Calculation of Universal Gas Constant R From the Gas Equation PV = RT. Simple Problems Based on Mayer's Relation.	**4 Hrs** **4 Hrs** **4 Hrs**
2	**THERMODYNAMICS, LIQUEFACTION OF GASES AND NON-CONVENTIONAL ENERGY** **2.1 THERMODYNAMICS** First Law of Thermodynamics – Statement - Isothermal and Adiabatic Changes - Explanation – Equations for Isothermal and Adiabatic Changes (No Derivation) Simple Problems Based on Equations $P_1V_1 = P_2V_2$ and $P_1V_1^{\gamma} = P_2V_2^{\gamma}$ Second Law of Thermodynamics – Clausius Statement and Kelvin's Statement. **2.2 LIQUEFACTION OF GASES** Liquefaction, Critical Temperature, Critical Pressure and Critical Volume – Definitions – Principle Used in Cascade Process – Cascade Process of Liquefaction of Oxygen –Disadvantages of Cascade Process - Joule Thomson Effect – Temperature of Inversion – Liquefaction of air by Linde's Process. **2.3 NON – CONVENTIONAL ENERGY** Introduction – Non-Renewable And Renewable (Alternate) Energy Sources – Examples – Solar Energy, Wind Energy, Geothermal energy & Biomass energy – Advantages and Disadvantages of Renewable Energy.	**5 Hrs** **4 Hrs** **3 Hrs**
3	**LIGHT AND REMOTE SENSING** **3.1 OPTICS** Refraction – Laws of Refraction – Refractive Index of a Medium –	**4 Hrs**

	Definition- Spectrometer – Experimental determination of Refractive Index Using spectrometer – Phenomenon of Total Internal Reflection - Fiber Optics – Introduction - OFC as a wave guide – Advantages of OFC– problems using the refractive index **3.2 LASER** LASER – Characteristics of LASER – Principle of LASER – Spontaneous Emission – Stimulated Emission – Population Inversion – Ruby laser – Construction and working – Applications of LASER. **3.3 REMOTE SENSING** Remote Sensing – Introduction – Active and Passive Remote Sensing – Explanation and Examples – Components of Remote Sensing – Data Acquisition and Data Analysis – RADAR – Principle and Working With Block Diagram.	**4 Hrs** **4 Hrs**
4	**ELECTRICITY** **4.1 ELECTRICAL CIRCUITS** Ohm's Law – Laws of Resistances – Resistivity, Conductivity, Super conductivity and Meissner effect - Definitions – Kirchoff's Current and Voltage Laws – Wheatstone's Bridge : (condition for balance) – Simple Problems Based on Expression for Resistivity. Capacitance of a capacitor – Definition – 'farad' – Definition – Expressions for effective capacitance when capacitors are connected in series and in parallel – simple problems based on effective capacitance for series and parallel Connections of capacitors. **4.2 EFFECTS OF CURRENT** Joule's Law of Heating – Experimental Determination of Specific Heat Capacity of a Liquid Using Joule's Calorimeter – Faraday's Laws of Electrolysis – Electro Chemical Equivalent (E.C.E) Of An Element – Definition – Experimental Determination of E.C.E. of Copper - Simple problems based on expressions for e.c.e. **4.3 MEASURING INSTRUMENTS** Expression for the Force Acting on a Current Carrying Straight Conductor Placed In a Uniform Magnetic Field – Fleming's Left Hand Rule – Expression for the Torque Experienced By a Rectangular Current Carrying Coil Placed Inside a Uniform Magnetic Field – Working of a Moving Coil Galvanometer And Its Merits – Conversion of Galvanometer into an Ammeter And Voltmeter.	**4 Hrs** **4 Hrs** **4 Hrs**
5	**X-RAYS, PHOTO ELECTRIC EFFECT & ULTRASONICS** **5.1 X-RAYS** Definition – production of X-rays (Coolidge tube), Types of X-rays – Properties of X-rays – Application of X-rays **5.2 PHOTO ELECTRIC EFFECT** Introduction – Hallwach experiment – Laws of photo electric emission – Einstein's photo electric equation – photo electric cells – Application of photo electric cells.	**4 Hrs** **4 Hrs**

	5.3 ULTRASONICS Introduction – Piezo electric effect – Production of ultrasonics waves by piezo – electric method – Properties of ultrasonic waves – Applications of ultrasonics waves.	**4 Hrs**

Reference Book :

1) Fundamentals Of Physics – Brijlal And Subramaniam.
2) Fundamentals Of Electricity – D.N. Vasudeva – S. Chand & Co
3) Non- Conventional Energy Sources – G.D. Rai.- Khanna Publishers.
4) Text Book Of Remote Sensing And Geographical Information Systems – M. Anji Reddy, BS Publications.
5) Applied Physics – Dr.M.Arumugam - Anuradha Publishers.

END EXAMINATION - QUESTION PAPER PATTERN

N203 - ENGINEERING PHYSICS II

(Relevant data should be provided in the Question paper for solving the problems)

Time: 3 Hrs. **Max.Marks: 100**

PART A - **20 Questions to be answered out of 25 for 2 marks each.**
PART B - **All the 5 Questions to be answered**
Each question in PART B will contain 3 Sub questions, out of them 2 Sub questions is to be answered for 6 marks each.
The complete syllabus is covered with equal weightage.

Part A	**20 X 2**	**40 Marks**
Part B Descriptive answer type questions Each question in PART B will contain 3 Sub questions, out of them 2 Sub questions is to be answered for 6 marks each.	**5 X 2 X 6**	**60 Marks**
Total		**100 Marks**

N-SCHEME
(Implements from the Academic year 2019-2020 onwards)

Course Name **: All branches of Diploma in Engineering**
Subject Code **: N204**
Semester **: II**
Subject Title : **ENGINEERING CHEMISTRY II**

TEACHING AND SCHEME OF EXAMINATION

No. of Weeks per Semester: 14 Weeks

SUBJECT	INSTRUCTIONS		EXAMINATION			
ENGINEERING CHEMISTRY II	HOURS / WEEK	HOURS / SEMESTER	MARKS			DURATION
			Internal assessment	Board examination	Total	
	5 Hrs	70 Hrs	25	100*	100	3 Hrs

* Examination will be conducted for 100 marks and it will be reduced to 75 marks.

Topics and Allocation of Hours:

Unit	Topic	Time
1	Environmental Chemistry Air pollution, Water Pollution, Solid waste	12 Hrs
2	Fuels, Combustion, Rocket propellants	12 Hrs
3	Polymer, Abrasives, Composite materials, Refractories	12 Hrs
4	Metallurgy, Extraction of iron, Powder metallurgy	12 Hrs
5	Nuclear Chemistry, Photo Chemistry, Cement and Ceramics,	12 Hrs
	Revision, Assessment Test And Model Exam	10 Hrs
	TOTAL	70 Hrs

RATIONALE:

Modern development of industries require more understanding of materials required for Engineering like cement, ceramics, refractories. This part of chemistry explains various aspects with regard to environment, fuels, metals, polymers, nuclear chemistry and photochemistry. This subject will develop basic understanding about metal extraction, heat treatment and powder metallurgy.

OBJECTIVES:

The objective of this Course is to make the student:

1. To acquire knowledge about Environmental Chemistry.
2. To acquire knowledge about fuels, advantages and combustion of fuels and analysis and Rocket propellants.
3. To know about extraction of metal – iron, steel manufacture, powder metallurgy and refractory.
4. To know about polymer, composite materials and photochemistry.
5. To know about the fundamentals of nuclear chemistry, engineering materials like cement, ceramics and refractory.

N204 - ENGINEERING CHEMISTRY II
DETAILED SYLLABUS

Contents: **Theory**

Unit	Name of the topic	Hours
1	**ENVIRONMENTAL CHEMISTRY** **1.1 Air Pollution:** Pollution and Air pollution – Definition – Air pollutants (SO_2, H_2S, HF, CO and Dust) – Sources and Harmful effects – smog – Formation of Acid Rain – Harmful effects – Green House Effect – Causes – Global warming – Harmful effects – Ozone Layer – Importance – Causes for Depletion of Ozone Layer (No equations) – Harmful effects of Ozone Layer Depletion – Control of Air Pollution. **1.2 Water Pollution:** Causes of Water Pollution – Sewage, Effluents, Algae and Microorganisms – Harmful effects –Sewerage – Definition – Sewage Disposal – Industrial Effluents – Harmful effects of Effluents – Harmful effects of Heavy Metal Ions – Lead, Cadmium, Zinc and Copper – Treatment of Effluents – Eutrophication – Definition and harmful effects. **1.3 Solid Waste Management:** Solid Waste – Definition – Problems – Types of Solid Waste – Methods of disposal – Land fill and Incineration - Green Chemistry Definition – Goals of Green Chemistry (Basic ideas) – Recycling – Definition – Examples – Advantages of Recycling (Basic ideas)	4 Hrs 4 Hrs 4 Hrs
2	**2.1 Fuels**: Fuel and fossil fuel – Definition – Calorific value – Liquid fuels – Petroleum – Fractional distillation – Fractions and uses – Cracking (Concept only) – Liquid Hydrogen as fuel – Gaseous fuels – Preparation, composition and specific uses of Producer gas and Water gas – Composition and uses of CNG and LPG – advantages of gaseous fuels. **2.2 Combustion:** Definition – Combustion calculation by mass – Stoichio metric calculations – Volume of air required – Definition of Flue gas – Flue gas Analysis – Orsat Apparatus – Simple numerical problems. **2.3 Rocket Propellants:** Definition – Characteristics – classification of propellants – brief idea of solid and liquid propellants.	5 Hrs 4 Hrs 3 Hrs

3	**3.1 Plastics and Rubber:** Plastics – Definition - Types of plastics – Thermoplastics and Thermoset plastics – Differences – Mechanical properties of plastics – Polymers in Surgery – Biomaterials – Definition – Biomedical uses of Polyurethane, PVC, Polypropylene and Polyethylene – Rubber- Defects of natural rubber– Compounding of rubber – Ingredients and their functions – Vulcanization – Definition and Purpose. **3.2 Abrasives:** Definition – Classification – Hardness in Moh's scale – Natural abrasives – Diamond, Corundum, Emery and Garnet – Synthetic abrasives – Carborundum – Boron carbide – Manufacture – Properties and uses. **3.3 Composite materials and Refractories:** Definition – Examples – Advantages over metals and polymers – General applications – Refractories - Definition – Requirements of a good Refractory – Classification – Examples and uses – Uses of Fireclay bricks, Alumina bricks and Silica bricks.	5 Hrs 3 Hrs 4 Hrs
4	**4.1 Metallurgy:** Mineral – ore – types of ores – flux –slag – gangue – metal extraction process – concentration of ores – gravity separation – froth floatation method – magnetic separation – roasting – calcination – smelting – reduction – purification process. **4.2 Extraction of Iron:** Blast furnace – cast iron – steel manufacture – Bessemer converter – Heat treatment of steel – Hardening – annealing – tempering. **4.3 Powder metallurgy:** Definition – Preparation of Metal Powder – Atomization – Reduction of Metal Oxide – Applications of Powder Metallurgy.	5 Hrs 4 Hrs 3 Hrs
5	**5.1 Nuclear Chemistry:** Radio activity – alpha – beta – gamma rays – charge and mass –isotope – isobar –radioactive decay – alpha emission – beta emission – gamma emission – half life period – simple problems – nuclear fission – nuclear fusion – chain reaction – nuclear reactor – reactor core – nuclear reactor coolant - control rods – neutron moderator – steam turbine – application of radio isotopes. **5.2 Cement and Ceramics:** Cement Definition – Manufacture of Portland Cement – Wet Process – Setting of Cement (No equation) - Ceramics White pottery – Definition – Manufacture of White pottery – Uses – Definition of glazing – Purpose – Methods. **5.3 Photochemistry:** Introduction – important terms – charge transfer, electronic energy migration, emission, excited state, ground state, Fluorescence, Phosphorescence, Chemiluminescence.	5 Hrs 4 Hrs 3 Hrs

Text Book:

1. Engineering Chemistry – Jain & Jain – Dhanpat Rai & Sons.
2. A Text Book of Engineering Chemistry – S.S. Dara – S. Chand Publication.
3. Engineering Chemistry II – Tamil Nadu Text Book Corporation

Reference Book:

1. Chemistry of Engineering Material-C.V. Agarwal, Andranaidu C. Parameswara Moorthy – B.S. Publications.
2. Engineering Chemistry – Uppal – Khanna Publishers.
3. A Text Book of Inorganic Chemistry – P.L. Soni – S. Chand Publication.
4. Environmental chemistry - V P Kudesia – Pragati Publishers.

LEARNING STRUCTURE

APPLICATION:

Apply the knowledge to control environment pollution and selecting fuels free from pollution and to use the materials like rubber, polymer, abrasives and composite materials. Apply the knowledge of metallurgy to understand the extraction of iron. Study the application of radioactive isotope in industries.

PROCEDURE:

Defining various kinds of pollution and disposing them.	Defining fuels, combustion and rocket propellants	Defining natural and manmade polymer and gain knowledge about abrasives, composite materials and refractories.	Defining ore, gange, flux slag and study of various concentration methods, extraction of iron and steel and production of powder metallurgical products.	Defining radioactivity, fission and fusion reactions, study of cement and ceramics, photochemistry.

CONCEPT:

Understanding the concept of pollution and green chemistry.	Understanding about fuels, combustion and stoichiometric equation for combustion.	Understanding about natural and manmade polymer and gain knowledge about abrasive , composite materials and refractories.	Understanding about various types of ore and concentration methods, iron, steel, powder metallurgy	Understanding about nuclear chemistry and engineering materials like cement, ceramic and photochemistry.

FACTS:

Environmental Chemistry Air pollution, Water Pollution, Solid waste Management.	Fuels, Combustion, Rocket propellants.	Polymer, Abrasives, Composite materials, Refractories.	Metallurgy, Extraction of iron, Powder metallurgy.	Nuclear Chemistry, Photo Chemistry, Cement and Ceramics

END EXAMINATION - QUESTION PAPER PATTERN
N204 - ENGINEERING CHEMISTRY II

Time: 3 Hrs. **Max.Marks: 100**

PART A - **20 Questions to be answered out of 25 for 2 marks each**.

PART B - **All the 5 Questions to be answered**

Each question in PART B will contain 3 Sub questions, out of them 2 Sub questions is to be answered for 6 marks each.

Part A	**20 X 2**	**40 Marks**
Part B Descriptive answer type questions Each question in PART B will contain 3 Sub questions, out of them 2 Sub questions is to be answered for 6 marks each.	**5 X 2 X 6**	**60 Marks**
Total		**100 Marks**

Out of the 3 Sub questions in PART B, one sub question must be on problem based to test the analytical ability/logical ability /diagnostic ability/conceptual ability relevant to that subject content. Equal importance is to be given to whole syllabus.

N-SCHEME

(Implements from the Academic Year 2019-2020 onwards)

Course Name : **Diploma in Mechanical Engineering**
Subject code : **N5205**
Semester : **II**
Subject Title : **ENGINEERING GRAPHICS II**

TEACHING AND SCHEME OF EXAMINATION:

No. of weeks per semester: 14 weeks

Subject	Instructions		Examination			
	Hours / Week	Hours / Semester	Marks			Duration
			Internal Assessment	End Examination	Total	
ENGINEERING GRAPHICS II	5 Hrs	70 Hrs	25	100*	100	3 Hrs

* Examination will be conducted for 100 marks and it will be reduced to 75 marks.

Topics and Allocation of Hours

Sl.No	Topic	Time
1	Section of Solids	11 Hrs
2	Development of Surfaces	18 Hrs
3	Orthographic Projection	23 Hrs
4	Missing views and Isometric projections	18 Hrs
Total		**70 Hrs**

RATIONALE:

Engineering graphics is a basic subject for Mechanical and Civil in Diploma Engineering. Since engineering drawing is considered as the language of engineers, the proper understanding and practice is required with proper use of drawing instruments.

This subject is aimed at providing basic understanding of the fundamentals of Engineering Drawing; mainly visualization of three dimensional drawings for practical applications and the use of drawing in real life engineering applications.

The topics covered are based on the syllabus for Diploma studies in engineering. The subject is planned to include sufficient practices which would help the student in visualization of three dimensional objects and developing the drawing.

The chapters are arranged in sequence and starts from the basic concepts of section of solids. It proceeds to the construction of development of surfaces and isometric

projections. By the end of the subject, it is expected that the students would be matured to visualize engineering component by reading an engineering drawing.

OBJECTIVES:

At the end of the practice, the students will be able to,

- Understand the importance of drawing.
- Draw the section of solids.
- Draw the development of solids and objects.
- Draw the orthographic views from the given pictorial drawing.
- Draw the missing views from the given drawing.
- Convert orthographic views into isometric drawings.

N5205 - ENGINEERING GRAPHICS II
DETAILED SYLLABUS

Contents: **Theory**

<table>
<tr><th>Unit</th><th>Name of the Topic</th><th>Hours</th></tr>
<tr><td>I</td><td>

SECTION OF SOLIDS

Need for section view – cutting plane – cutting plane line – representations as per BIS code – Hatching line – true section – section of simple solids – prism, pyramid, cylinder, cone – position of solids – axis perpendicular to one plane and parallel to other plane – position of cutting planes – cutting plane perpendicular to one plane and parallel to other plane – cutting plane perpendicular to one plane and inclined to other plane – true shape – exercises.

<table>
<tr><td colspan="2">Minimum criteria for class assessment</td></tr>
<tr><td>No. of Drawing sheets</td><td>No. of Exercises covering all portions</td></tr>
<tr><td>2</td><td>6</td></tr>
</table>

</td><td>11</td></tr>
<tr><td>II</td><td>

DEVELOPMENT OF SURFACES

2.1 Need for preparing development drawing with reference to sheet metal work – procedure for preparing development drawing of prism, pyramid, cylinder and cone – exercises in rectangular, square and hexagonal prisms and pyramids – exercises in regular cylinder and cone.

<table>
<tr><td colspan="2">Minimum criteria for class assessment</td></tr>
<tr><td>No. of Drawing sheets</td><td>No. of Exercises covering all portions</td></tr>
<tr><td>1</td><td>6</td></tr>
</table>

2.2 Cutting plane – cutting plane line – development of truncated prism, pyramid, cylinder and cone – frustum of pyramid and cone – development of simple components such as elbow, ducts, lamp shade and funnel.

<table>
<tr><td colspan="2">Minimum criteria for class assessment</td></tr>
<tr><td>No. of Drawing sheets</td><td>No. of Exercises covering all portions</td></tr>
<tr><td>3</td><td>10</td></tr>
</table>

</td><td>18</td></tr>
<tr><td>III</td><td>

ORTHOGRAPHIC PROJECTIONS

3.1 Introduction – projection terms – orthographic projection – planes of projection – principle orthographic views – designation of views – four quadrants – first angle projection – third angle projection – symbols for the first and third angle projections – comparison of first and third angle projections – arrangement of views in the first and third angle projections – Simple exercises in first and third angle projections with minimum three views of simple components.

<table>
<tr><td colspan="2">Minimum criteria for class assessment</td></tr>
<tr><td>No. of Drawing sheets</td><td>No. of Exercises</td></tr>
<tr><td>1</td><td>4</td></tr>
</table>

3.2 Draw the projections of the simple engineering components using first angle projection – exercises in drawing orthographic views – three views – front view, top view and right/left side views in full size/half size.

<table>
<tr><td colspan="2">Minimum criteria for class assessment</td></tr>
<tr><td>No. of Drawing sheets</td><td>No. of Exercises covering all portions</td></tr>
<tr><td>3</td><td>12</td></tr>
</table>

</td><td>23</td></tr>
</table>

<table>
<tr><td rowspan="2">IV</td><td>MISSING VIEWS AND ISOMETRIC PROJECTIONS
4.1 Missing views
Reading a drawing – missing views – visualization – possible view problems – drawing a missing view or third view – simple exercises.
<table>
<tr><td colspan="2">Minimum criteria for class assessment</td></tr>
<tr><td>No. of Drawing sheets</td><td>No. of Exercises covering all portions</td></tr>
<tr><td>1</td><td>6</td></tr>
</table></td><td rowspan="2">18</td></tr>
<tr><td>4.2 Isometric projections
Introduction – isometric view – isometric projection – methods of drawing an isometric view – box method – construction of arcs and circles – four centre method for drawing ellipse – construction of isometric drawing of components from the given orthographic views – simple exercises.
<table>
<tr><td colspan="2">Minimum criteria for class assessment</td></tr>
<tr><td>No. of Drawing sheets</td><td>No. of Exercises covering all portions</td></tr>
<tr><td>1</td><td>8</td></tr>
</table></td></tr>
</table>

Text Books

1. Bhatt N.D. and Panchal V.M., "Engineering Drawing", Charotar Publishing House, 50th Edition, 2010.
2. Gill P.S., "Engineering drawing", S.K. Kataria & Sons.

Reference Books

1. Gopalakrishnan.K.R., "Engineering Drawing", (Vol.I and Vol.II), Dhanalakshmi publishers, Edition 2, 1970.
2. Venugopal.K, Sreekanjana G, "Engineering Graphics", New Age International Publishers.
3. K V Nataraajan " A Text Book of Engineering Drawing".
4. Besant Agarwal, C M Agarwal "Engineering drawing", Tata McGraw Hill Education Private Limited.
5. Barkinson & Sinha, "First Year Engineering Drawing", Pitman Publishers.

END SEMESTER EXAMINATION QUESTION PAPER PATTERN

N5205 - ENGINEERING GRAPHICS II

Time: 3 Hrs **Max Marks: 100**

Note: (i) Answer all the questions only in the drawing sheet.
(ii) Assume missing dimensions suitably, if required.

PART – A **4 x 5 = 20**

Answer any four questions. Each question carries five marks.

Note: Five questions will be asked (Sl.No: 1 to 5). (Chapters: 2.1, 2.2, 3.1, 3.2, 4.1)

PART – B **4 x 20 = 80**

Answer any four questions. Each question carries twenty marks.

Note: Six questions will be asked (Sl.No: 6 to 11). At least one question from each unit.

(Units: I, II, III, IV)

TOTAL **100 Marks**

Internal Marks:

Sl.No	Particulars	Marks
1	Evaluation of class work – (Minimum 10 plates)	15
2	Continuous assessment tests (Average of two tests) (2 Hours duration)	5
3	Model Examination (3 Hours duration)	5
TOTAL		**25**

N-SCHEME
(Implements from the academic year 2019 – 2020 onwards)

Course Name : **All branches of Diploma in Engineering**
Subject Code : **N206**
Semester : **II**
Subject Title : **APPLIED SCIENCE PRACTICAL II**

TEACHING AND SCHEME OF EXAMINATION

Number of weeks per semester : 14 weeks

Subject	Instructions		Examination			
	Hours/ Week	Hours / Semester	Marks			Duration
			Internal Assessment	Board Examination	Total	
APPLIED SCIENCE PRACTICAL II	4 Hrs.	56 Hrs.	25	100*	100	3 Hrs.

* Examination will be conducted for 100 Marks and it will be reduced to 75 Marks.

PHYSICS

RATIONALE :

In Diploma level engineering education skill development plays a vital role. The skill development can be achieved by giving proper hands on experience in handling of various instruments, apparatus and equipment. This is accomplished by doing engineering related experiment in practical classes in various laboratories.

GUIDE LINES :

All The Five experiments given in the list of experiments should be completed and given for the end semester practical examination.

- In order to develop best skills in handling Instruments / Equipment and taking readings in the practical classes, every two students should be provided with a separate experimental setup for doing experiments in the laboratory.
- The external examiners are requested to ensure that a single experimental question should not be given to more than four students while admitting a batch of 30 students during Examinations.

LIST OF EXPERIMENTS WITH OBJECTIVES:

1. REFRACTIVE INDEX

To determine the refractive index of a transparent liquid (water) using travelling microscope.

2. SPECTROMETER

To measure the angle of the prism using spectrometer.

3. SOLAR CELL.
To draw the V – I characteristics of the solar cell.

4. JOULE'S CALORIMETER.
To determine the specific heat capacity of water.

5. COPPER VOLTAMETER.
To determine the electro chemical equivalent (e.c.e.) of copper.

Note For Examination:

1. Individual equipment should be provided for the batch strength. The same experiment should not be kept more than four students.
2. All the experiments must be given in all the batches.
3. Any one experiment should be given by lot for the Practical Examination.
4. The external examiner should verify the availability of the equipment for the batch strength before the commencement of Practical Examination.
5. Properly evaluated record note book should be submitted for the Practical Examination.

ALLOCATION OF MARKS

Practical Examination : 100 Marks

Content	Marks Allotted
Formula & Diagram	15
Tabulation with proper units	5
Observation (including taking readings)	20
Calculation	5
Result	5
Total Marks	**50**

Internal Assessment : 25 Marks

Content	Marks Allotted
Observation	15
Record	10
Total	**25**

LIST OF EQUIPMENT :

1. REFRACTIVE INDEX

To determine the refractive index of a transparent liquid (water) using travelling microscope.

2. SPECTROMETER

To measure the angle of the prism using spectrometer.

3. SOLAR CELL.

To draw the V – I characteristics of the solar cell.

4. JOULE'S CALORIMETER.

To determine the specific heat capacity of water.

5. COPPER VOLTAMETER.

To determine the electro chemical equivalent (e.c.e.) of copper.

MODEL QUESTION PAPER (PHYSICS)

1. Determine the refractive index of the given transparent liquid using traveling Microscope.
2. Measure the angle of the prism using Spectrometer.
3. Draw the V – I characteristics of the solar cell.
4. Determine the specific heat capacity of water using Joul's Calorimeter.
5. Determine the electro chemical equivalent (e.c.e) of copper using Copper Voltameter.

CHEMISTRY

OBJECTIVES:

At the end of the program the student will be able to identify the acid and basic radical present in the given Inorganic simple salt.

Intellectual Skills:

1. Studying the effect of heating on substances and reagents
2. Study of the reactions of the following radicals leading to qualitative analysis of the given Inorganic simple salt soluble in water or dilute acids

Motor Skills:

1. Handling the apparatus carefully.
2. Awareness on Industrial Safety.

CONTENTS:

Analysis of Inorganic simple salt (QUALITATIVE ANALYSIS)

Analysis of five inorganic simple salts containing any one acid radical and basic radical without omitting any of the below mentioned radicals.

Acid Radicals : Carbonate, Chloride, Nitrate and Sulphate
Basic Radicals : Lead, Copper, Ferrous, Calcium and Ammonium

Note:

Every student should provided the separate location with the following minimum apparatus required in a batch.

Sl.No	Name of the item	Quantity(Nos.)
1	Funnel	1
2	Glass rod	1
3	Test tubes (15 X 1.5mm)	4
4	Test tubes (15 X 1.5mm)	1
5	Test tube cleaning brush	1
6	Test tube holder	1
7	Test tube stand	1
8	Wash bottle	1

Note:

1. Individual apparatus / equipment should be provided for the batch strength.
2. All the students should be given same question and each batch of student should be given different inorganic simple salt.
3. All the experiments must be given in all the batches.
4. The external examiner should verify the availability of the apparatus / equipment for the batch strength before the commencement of Practical Examination.
5. Properly evaluated record note book should be submitted for the End Practical Examination.

DETAILED ALLOCATION OF MARKS

END PRACTICAL EXAMINATION: 50 MARKS

DESCRIPTION	MARKS
Analysis of simple salt	46
Viva-Voce	04
Total Marks	**50**

GUIDELINES FOR EVALUATION

QUALITATIVE ANALYSIS:

FOR	MARKS
Identification of Acid radical with systematic Procedure	23
Identification of Basic radical with systematic Procedure	23
Identification of Acid radical with confirmatory test	10
Identification of Basic radical with confirmatory test	10
Mere spotting of Acid radical and Basic radical (3 + 3)	3 + 3

INTERNAL ASSESSMENT: 25 MARKS

CONTENT	MARK ALLOTED
Observation	15
Record	10
Total Marks	25

MODEL QUESTION PAPER (CHEMISTRY)

Analyse the given Inorganic simple salt and report the acid radical and basic radical present in it.

(Five salts should be given for each batch)

LIST OF APPARATUS / EQUIPMENTS REQUIRED (BATCH STRENGTH: 30 STUDENTS)

Infrastructure and Equipment required

Sl.No	Name of the item	Quantity (Nos.)
1	LPG connection for 30 students	
2	Working Table with all accessories for 30 students	
3	Exhaust Fan (High capacity)	Sufficient Nos
4	Fire Extinguisher	1
5	First Aid Box (Full set)	2
6	Safety Chart	1
7	Chemical Balance	1
8	Fractional weight Box	1

GLASSWARE AND OTHER ITEMS

Sl.No	Name of the item	Quantity(Nos)
1	Burette (50 ml)	35
2	Burette Stand	35
3	Pipette (20 ml) (With safety Bulb)	35
4	Pipette (10 ml)	5
5	Conical Flask (250 ml)	35
6	Funnel (3”)	50
7	Porcelain Tile	35
8	Measuring Cylinder (10 ml)	5
9	Measuring Cylinder (1000 ml)	2
10	Reagent Bottle (White) (250 ml)	60
11	Reagent Bottle (White) (125 ml)	100
12	Reagent Bottle (Amber) (250 ml)	80
13	Test Tube (15 mm x 1.5 mm)	1000

14	Test Tube (15 mm x 2.5 mm)	500
15	Test Tube Stand	35
16	Test Tube Holder	35
17	Test Tube cleaning brush	35
18	Glass Trough	5
19	Beaker (100 ml)	35
20	Glass Rod	100
21	Watch Glass (3”)	35
22	Wash Bottle (Polythene)	35
23	Nickel Spatula	35
24	Bunsen Burner for Gas connection	35
25	Plastic Bucket (15 L)	10
26	Filter Papers (Round)	Sufficient Nos.
27	Standard Flask (100 ml)	35

N-SCHEME

(Implements from the Academic Year 2019-2020 onwards)

Course Name : **Diploma in Mechanical Engineering**
Subject code : **N5207**
Semester : **II**
Subject Title : **COMPUTER APPLICATION PRACTICAL**

TEACHING AND SCHEME OF EXAMINATION:

No. of weeks per semester: 14 weeks

Subject	Instructions		Examination			
	Hours / Week	Hours / Semester	Marks			Duration
			Internal Assessment	End Examination	Total	
COMPUTER APPLICATION PRACTICAL	4 Hrs	56 Hrs	25	100*	100	3 Hrs

* Examination will be conducted for 100 marks and it will be reduced to 75 marks.

Topics and Allocation of Hours

Sl.No	Topic	Time
1	Word Processing	12 Hrs
2	Spread Sheets	12 Hrs
3	Database	9 Hrs
4	Power Point Presentations	12 Hrs
5	Drafting	11 Hrs
Total		**56 Hrs**

OBJECTIVES:

On completion of the exercises, the students must be able to

- Use the different facilities available in the word processor.
- Analyze the data sheet.
- Prepare database and make simple queries and pay slip.
- Prepare Power Point Presentations.
- Acquire knowledge about geometric construction.

N5207 - COMPUTER APPLICATION PRACTICAL
DETAILED SYLLABUS

I. Word Processing **12 Hrs**

Creating new document – Opening an existing document – Edit & Save a document – Typing a text – Deleting a text – Inserting a text – Finding a text – Replacing a text – Copying & Moving a text – Selecting Font & Font Size – Justifying Texts – Bold – Italic – Underline – Strike – Double strike – Coloring Text – Spell Check – Ruler – Formatting Page – Line Spacing – Margins – Page Size – Page Border – Page Color – Page Columns – Watermark – Page Break – Section Break – Portrait – Landscape – Inserting Symbols, Equations & Shapes – Text Box – Word Art – Hyperlink – Inserting Pictures – Picture Arrangement – Align Objects – Bullets & Numbering – Working with Tables – Header & Footer – Table of Contents – Inserting Page Number – Changing Character width & Line Spacing – Printing the document – Print Preview – Shortcuts for various activities in Word.

EXERCISES

1. Prepare seminar report from the given printed document of minimum 500 words. (Use text formatting tools, header & footer, page number, line spacing, font, tables, images and table of content.)
2. Create a resume for placement from the given printed template with your personal details.
3. Create a standard covering letter and use mail merge to generate the customized letters for applying to a job in various organizations.

II. Spreadsheet **12 Hrs**

Creating new worksheet – Opening an existing worksheet – Editing and Saving a worksheet – Creating, Renaming and Deleting worksheets in a workbook – Types of data like Numeric, text, etc. – Entering in a cell – Manipulation of a cell, row and column (deleting, inserting, finding, replacing, copying and moving) – Justifying in a cell, Merging cells and columns – Addition, Subtraction and using formula – Selecting Font and Font Sizes – Using and manipulating tables – inserting / deleting of rows and columns – Sorting Columns – Using Header and footer, Inserting Page number – Border and Shading of cells, rows and columns – Formatting page, margins, page size, portrait and landscape – Selecting area for printing, Printing of a worksheet and workbooks, Using print preview – Copy / moving text between two different worksheets and workbooks – Using Chart Wizard, Creation of different types of charts – Protect excel sheet using password – Shortcuts for various activities in Microsoft Excel.

EXERCISES

4. Create a worksheet for the given relational data (minimum ten records) and show the data in the Line Chart, Bar Chart and Pie Chart.
5. Create a worksheet for the given data with various functions like Sum, Average, Count, Min, Max, Logical functions [IF,AND, OR and NOT] & Round functions.
6. Create a worksheet for the given data and analysis the data with various filters and conditional formatting.

III. Database **9 Hrs**

Introduction – Menus – Tool bar – Create – Edit – Save – Data types – Insert – Delete – Update – View – Sorting and filtering – Queries – Report – Print.

EXERCISES

7. Prepare a payroll for employee database of an organization with the following details: Employee Id, Employee Name, Date of Birth, Department and Designation, Date of appointment, Basic pay, Dearness Allowance, House Rent Allowance and other deductions if any. Perform simple queries for different categories.
8. Design a pay slip for a particular employee from the above database.

IV. Presentation **12 Hrs**

Creating New Presentations – Opening Presentations – Saving Presentation – Inserting new Slides – Slide Layout – Slide Design – Presentation View – Adding Text – Font formatting – Paragraph formatting – Inserting Clipart & Pictures – Inserting and Manipulating Smart Art – Running a slide show – Insert Slide Number – Slide Header & Footer – Applying Slide Animation – Custom Animation – Inserting Shapes – Insert Video & Sound – Insert Action – Hyperlinks – Charts – Tables – Page setup – Print Preview – Printing – Shortcuts of various activities in power point.

EXERCISES

9. Create a power point of 15 slides from a topic to present in a presentation.
10. Create power point presentation of 10 slides about your college with Slide & Custom Animation, Shapes, Header & Footer, Slide number, Video, Audio, Picture, Tables and Hyperlink between slides.

V. Drafting **11 Hrs**

Introduction – Application of computer in drafting – Advantages over manual drafting – Hardware requirement – Software requirement – Windows desktop – screen interface – menus – Tool bars – How to start drafting package – How to execute command – types of co-ordinate systems – Absolute – Relative – Polar.

DRAWING AND EDITING COMMANDS - Creating objects (2D) – Using draw commands – Drawing with precision – Osnap options – drafting settings – drawing aids – Fill, Snap, Grid, Ortho lines – Function keys – Editing and modify commands – Object selection methods – Erasing object – Oops – Cancelling and undoing a command – Copy – Move – Array – Offset – Scale – Rotate – Mirror – Break – Trim – Extend – Explode - Divide – Measure – Stretch – Lengthen – Change properties – Color – line types – LT scale – Creating text – Editing text – Dimensioning – Methods of dimensions.

EXERCISES

11. Create two simple 2D engineering drawings.

(Practice Minimum 6 component drawings for practice)

Note For Examination:

1. Required minimum hardware and software facilities should be provided to the students. The students should be given proper training in all the sections. All the exercises should be completed. The student should maintain observation and record notebook and submit during the Board Practical Examinations.
2. Any one exercise should be given by lot for the Board Practical Examination.
3. The hard copy of the data / drawing required for exercise should be provided by the examiner with the question paper.

DETAILED ALLOCATION OF MARKS

End Practical Examination: 100 Marks

Content	Mark Allocated
Procedure	15
Data entry / Formatting / Creation	30
Demonstration / Execution	35
Output / Printout / Handout	15
Viva voce	05
Total Marks	**100**

Internal Assessment: 25 Marks

Content	Mark Allocated
Observation	15
Record	10
Total Marks	**25**